This is a digital copy of a book that was preserved for generations on library shelves before it was carefully scanned by Google as part of a project to make the world's books discoverable online.

It has survived long enough for the copyright to expire and the book to enter the public domain. A public domain book is one that was never subject to copyright or whose legal copyright term has expired. Whether a book is in the public domain may vary country to country. Public domain books are our gateways to the past, representing a wealth of history, culture and knowledge that's often difficult to discover.

Marks, notations and other marginalia present in the original volume will appear in this file - a reminder of this book's long journey from the publisher to a library and finally to you.

Usage guidelines

Google is proud to partner with libraries to digitize public domain materials and make them widely accessible. Public domain books belong to the public and we are merely their custodians. Nevertheless, this work is expensive, so in order to keep providing this resource, we have taken steps to prevent abuse by commercial parties, including placing technical restrictions on automated querying.

We also ask that you:

+ *Make non-commercial use of the files* We designed Google Book Search for use by individuals, and we request that you use these files for personal, non-commercial purposes.
+ *Refrain from automated querying* Do not send automated queries of any sort to Google's system: If you are conducting research on machine translation, optical character recognition or other areas where access to a large amount of text is helpful, please contact us. We encourage the use of public domain materials for these purposes and may be able to help.
+ *Maintain attribution* The Google "watermark" you see on each file is essential for informing people about this project and helping them find additional materials through Google Book Search. Please do not remove it.
+ *Keep it legal* Whatever your use, remember that you are responsible for ensuring that what you are doing is legal. Do not assume that just because we believe a book is in the public domain for users in the United States, that the work is also in the public domain for users in other countries. Whether a book is still in copyright varies from country to country, and we can't offer guidance on whether any specific use of any specific book is allowed. Please do not assume that a book's appearance in Google Book Search means it can be used in any manner anywhere in the world. Copyright infringement liability can be quite severe.

About Google Book Search

Google's mission is to organize the world's information and to make it universally accessible and useful. Google Book Search helps readers discover the world's books while helping authors and publishers reach new audiences. You can search through the full text of this book on the web at `http://books.google.com/`

1837
ARTES VERITAS SCIENTIA
LIBRARY OF THE
UNIVERSITY OF MICHIGAN
TUEBOR
SI QUÆRIS PENINSULAM AMŒNAM CIRCUMSPICE
COLLEGE
OF
ENGINEERING

TA
1
.M3

TRANSACTIONS,

1901.

PUBLISHED BY THE ASSOCIATION.

MANCHESTER
HERALD & WALKER, PRINTERS, POOL FOLD CHAMBERS, OFF CHAPEL WALKS.
1902.

CONTENTS.

1901.

	PAGE.
Index	—
Inaugural Address by the President, HENRY HODGSON, Our Educational System: the Machine Question .	1
School and Work, Discussion introduced by the PRESIDENT	13
Forced Lubrication, Discussion introduced by CHAS. DAY	37
Electric v. Rope-driven Travelling Cranes, Discussion introduced by DANIEL ADAMSON	49
Testing of Lathes for Accuracy, by W. C. WENK .	61
The Laboratory as a help to the Practising Engineer, by J. T. NICOLSON, D.Sc.	77
Engines for Driving large Dynamos, by CHAS. DAY .	129
American v. English methods of conducting Engineering Establishments, by ED. WOOD . . .	157
Recent Developments in fine Machine Grinding, by HANS RENOLD	185
Electric Welding, by T. T. HEATON	205
Workshop Organization, by A. P. LOSCHER . .	237
Annual Report, 1901	275

Engin. Lib
Engin
Sutton
14467

INDEX.

1901.

ADAMSON DANIEL, Paper on Electric v. Rope-driven Travelling Cranes, 49.—Remarks on Electric Welding, 219.

ADDRESS OF PRESIDENT, Henry Hodgson, 1.—Our Educational system, 2.—The Machine question, 6.—Vote of Thanks, 9.

AMERICAN V. ENGLISH METHODS OF CONDUCTING ENGINEERING ESTABLISHMENTS: Paper on, by Edw. Wood, 157.—America, 158.—Preparation of boys, 159.—American and English objects, 161.—Commercial department, 161.—Drawing office, 165.—Workshop, 166.—Discussion, 172.

ANNUAL REPORT OF COUNCIL, 1901, 275.—Additions to Membership, 275.—Deaths, 276.—Resignations, 276.—Erasures, 276.—Excursions, 276—Papers read, 277.—Anniversary Dinner, 277.—Opening Sessional Meeting, 278.—Library, 279.—Visits: Preston; Electric Railway and Tramway Carriage Company, and English Electric Manufacturing Company, 280.—Bedford, W. H. Allen & Co., 282.—Obituary: R. C. Christie, 285.—J. Hall, 285.—W. Potter, 286.—M. Vickers, 286.—J. H. Widdowson, 286.—Treasurer's General Cash Account, 288.-Superannuation Fund Account, 289.

ASHBURY, THOS., remarks on School and Work, 22.—American Competition 172, 180.—Electric Welding, 223.—Workshop Organization, 262.

BEARD, J., remarks on Electric Welding, 227.

BENTLEY, G., remarks on Machine Grinding, 197.

BERRY, C. H., remarks on Forced Lubrication, 40, 42.

BOLAS, JAS., remarks on Testing Lathes, 71.—Workshop Organization, 264.

BOSWELL, S., remarks on Electric Welding, 221.

BRAYSHAW, S., remarks on Testing Lathes, 73.—Machine Grinding, 199.

BUNTING, W., remarks on Testing Lathes, 71, 73.

BUTTERWORTH, JAS., remarks on Electric Welding, 228.

COLLIER, C. H., remarks on School and Work, 33.—Workshop Organization, 265.

CONSTANTINE, E. G., remarks on Testing Lathes, 68.—American Competition, 172.—Workshop Organization, 265.

COOK, W. H., remarks on Testing Lathes, 74.—American Competition, 174.—Machine Grinding, 198.—Workshop Organization, 263.

COSTER, A. V., remarks on Gas Engines, 145.

CRANES, ELECTRIC v. ROPE-DRIVEN: Paper on, by Dauiel Adamson, 49.—Discussion, 51.—Reply, 58.

DAY, CHAS., Topical Discussion; Forced Lubrication, 37.—Remarks on Electric v. Rope-driven Cranes, 57.—Paper on Engines for Driving large Dynamos, 129.—Machine Grinding, 196.

DUTTON, J., remarks on School and Work, 34.

ELECTRIC WELDING: Paper on, by T. T. Heaton, 205.—Discussion, 218.—Reply, 231.

ENGINES FOR DRIVING LARGE DYNAMOS: Paper on, by Chas. Day, 129.—Introduction, 129.—Advantages of increased speeds, 131.—Disadvantages, 132.—Type of engine, 132.—Cleanliness, 132.—Lubrication, 133.—Valves, 133.—Valve Gear, 135.—Governor, 136.—Emergency governor, 139.—Turning moment, 140.—Conclusion, 141.—Discussion, 141.—Reply, 150.

ETCHELLS, A., remarks on Forced Lubrication, 40.

GREGORY, R., remarks on Forced Lubrication, 40.

GRINDING, FINE MACHINE: Paper on, by Hans Renold, 185.—Discussion, 196.—Reply, 203.

HALL, J. HOWARD, remarks on School and Work, 27.

HARDMAN, J. E., remarks on Electric Welding. 224.

HEAP, WALTER, remarks on Machine Grinding, 198.

HEAP, WILLIAM, remarks on School and Work, 29.—Electric v. Rope-driven Cranes, 52.—Testing Lathes, 73.—Machine Grinding, 200.—Electric Welding, 221.

HEATON, T. T., Paper on Electric Welding, 205.

HINDLE, T. T., remarks on School and Work, 30.

HOBBS, A., remarks on Workshop Organization, 263.

HODGSON, HENRY, Presidential Address, 1.—Remarks on School and Work, 13, 24.—Forced Lubrication, 43.—Electric v. Rope-driven Cranes, 57.—Testing Lathes, 76.—Engineering Research, 113, 119,

HOY, ALDERMAN, remarks on Engineering Research, 118.

HUNT, C. W., remarks on Testing Lathes, 69.

HADLEY, A., remarks on Dynamo Driving, 149.

INGHAM, W., remarks on School and Work, 22.—Forced Lubrication, 42.—Engineering Research, 117.—Workshop Organization, 264.

INGRAM, M., remarks on School and Work, 28.

LABORATORY AS A HELP TO THE PRACTISING ENGINEER: Paper on, by Dr. John T. Nicolson, 77.—Discussion, 113.—Reply, 120.

LATHES, TESTING OF: Paper on, by W. C. Wenk, 61.—Discussion 67.—Reply 75.

LOSCHER, A. P., remarks on American Competition. 175.—Paper on Workshop Organization, 237.

LUBRICATION, FORCED: Paper on, by Chas. Day, 37.—Advantages of, 37.—Disadvantages of, 38.—Discussion, 39.—Reply, 44.

MASSEY, H. F., remarks on School and Work, 21.

MASSEY, L., remarks on Forced Lubrication, 42.

MARSDEN, —., remarks on Electric Welding, 219.

MATTHEWS, R., remarks on Electric v. Rope-driven Cranes, 56.

MELLANBY, A. L., remarks on Engineering Research, 114.

MILLAR, W., remarks on School and Work, 27.

MITTON, J., remarks on Forced Lubrication, 42.

MORRIS, J., remarks on Testing Lathes, 67, 75.

MYLES, J. S., remarks on Machine Grinding, 202.

NASMITH, JOS., remarks on School and Work, 23.

NEILSON, R. M., remarks on Engines for driving Dynamos, 143.—Electric Welding, 227.

NICOLSON, J. T., D.Sc., Paper on the Laboratory as a help to the Practising Engineer, 77.

PILLING, H., remarks on Engines for driving Dynamos, 143.

PROUT, F., remarks on Workshop Organization, 263.

REA, A., remarks on School and Work, 32.—Electric v. Rope-driven Cranes, 53.

RENDELL, S., remarks on School and Work, 31.

RENOLD, HANS, remarks on Testing Lathes, 72.—Engineering Research, 114.—American Competition, 178.—Paper on Developments in fine Machine Grinding, 185.

REYNOLDS, J. H., remarks on School and Work, 18.—Engineering Research, 119.

SANER, J. A., remarks on School and Work, 24.

SAXON, JAMES, remarks on School and Work, 26.—Engineering Research, 116.—American Competition, 176.

SAXON, ALFRED, remarks on School and Work, 22.—Forced Lubrication, 39.—Electric v. Rope-driven Cranes, 55.—Testing Lathes, 68.—Engineering Research, 113.—Engines for Driving large Dynamos, 141.—Electric Welding, 225.—Workshop Organization, 262.

SCHOFIELD, JOHN, remarks on High-speed Engines, 149.

SCHOOL AND WORK: Discussion introduced by the President, Henry Hodgson, 13.—The Youths' interests, 14.—The Parents' interests, 15.—The Employers' interests, 16.—Discussion, 17.—Resolution, 24.

STEAD, W., remarks on Forced Lubrication, 43.

TRITTON, W. A., remarks on Machine Grinding, 201.

VOSE, J., remarks on Testing Lathes, 70.—American Competition, 173.—Machine Grinding, 200.—Electric Welding, 222.

WALMSLEY, C., remarks on Forced Lubrication, 41.

WALKER, E. R., remarks on School and Work, 28.

WALTON, T., remarks on Forced Lubrication, 41.—Machine Grinding, 200.

WALLIS-JONES, R. J., remarks on Electric Welding, 229.

WATSON, J., remarks on School and Work, 27.

WEBB, HENRY, remarks on Inaugural Address, 9.—School and Work, 17.—Forced Lubrication, 42.

WELLS, C. J., remarks on Engines for driving Dynamos, 147.

WENK, W. C., Paper on the Testing of Lathes for accuracy, 61.

WHITEHEAD, THOS., remarks on Electric v. Rope-driven Cranes, 51.

WOOD, EDWARD, Paper on American v. English methods of conducting Engineering Establishments, 157.

WOOD, T., remarks on Electric Welding, 225.

WORKSHOP ORGANIZATION: Paper on, by A. P. Loscher, 237.—Discussion, 262.—Reply, 265.

YATES, W., remarks on American Competition, 178.—Workshop Organization, 263.

INAUGURAL ADDRESS

BY THE PRESIDENT,

Mr. HENRY HODGSON,

DELIVERED SATURDAY, 12TH JANUARY, 1901.

At the beginning of a new century it seems right and fitting to look around and see if it is possible to inaugurate any new method or system that shall be an improvement upon what has prevailed during the years that have gone. And to do this it is well to look back and see what experience of the past may shew as being weak and defective and open for improvement. A review of this kind may show us many things in our social, political, and economic systems that are open, very wide open, for improvements. But it is not my intention to go into any of the broad fields that may be open to the philosopher in such matters. I prefer to confine my attention, and I hope yours, to what is more directly, as a company of engineers, interesting to us as engineers.

On the very threshold of a new century, we may and ought to ask ourselves the question, and if possible bring to a definite conclusion, what is the greatest need at the present time for continued success in our profession. We have done well in the past, but because we have done well that is no reason why we should fold our hands and rest content. The world moves on, and we must move with it, yea rather we must move even at a greater pace than the world generally, or we shall be doing nothing. Our forefathers were not content to move at the same pace as the world, and by so doing they left us a heritage of success, of light, and of leading, that we cannot easily lay aside, rest and be content.

We must be up and doing, and keep, or if needs be, recover our position as the leading engineering people of the world.

THE PRESENT EDUCATIONAL SYSTEM.

I have carefully considered the matter, and arrived at a conclusion satisfactory to my own mind, that education, or the want of education, is the one leading factor of the present position, and that to hold or recover the leading position, more attention will have to be paid to education, both general and technical. It may be urged as a reply to this that we have held and still hold a very high, if not the first position in engineering, without having had any great fuss made about education, and that we got on very well before the term Technical Education was invented; all this must be admitted, but it is very easy to be first when there is only one taking part in the race.

Now the condition of things is changed, there are others taking part in the competiton, and it behoves us to look well to it, that we do not neglect anything that will help us. The question then is, is our present educational system good enough, or carried far enough. I do not think it is, there does not seem to me to be sufficient facilities and inducements for the youth of our country who show abilities of the requisite character to develop them. Hitherto, whatever measure of success these have attained they have attained it in spite of difficulties and hindrances; now I think that our educational systems should be so arranged that these difficulties and hindrances should be removed, and facilities take their places.

The question may now be asked, how is this to be accomplished? As an answer to this I will ask are you satisfied with the present position of our educational system? I think your answer will be, no, but that it is now much better than it was prior to the passing of the Education Act, which fixed that a certain standard of education should be reached before a youth

could be released and undertake employment. Since that Act was passed there has been ample time to have carried it many degrees further, and provision made for all who shewed marked ability to have had their education continued on the special work for which they are fitted. My idea is that Schools of the higher grade type should be specialized, and that the youths who show special aptitude should have their education continued in schools having special provision in the way of teachers and instruments for their own particular branch.

Why should there not be National Schools devoted to the special education of youths who have shown aptitude in Mathematics and other subjects that are essential to the making of an Engineer? I am aware that there are a few such, but these are not within the reach of the sons of the wage earning public, who form the great bulk of our population. A few clever youths obtain Scholarships, which enable them to take advantage of these special schools, but they are only enabled to do this by the generosity of a few private individuals, and are therefore limited in their scope. I am wishful that this should be enlarged so that all who are mentally capable should have full opportunity of developing their minds, and not be held back by lack of the pecuniary means so to do.

The Government carry this out to a certain extent, for those who afterwards are to be employed in the service of the Government, as in the Military and Naval Schools, and at Cooper's Hill for those afterwards to be employed in the Indian Civil Service. These are however only for special objects, and do not meet the case I have in my mind—I would have education in all its stages made free, and carried to the fullest extent of the individual ability of each.

This I suppose will be considered a very democratic theory, but it is one I am prepared to adopt, and would carry out to the

fullest extent possible, believing that it will be the best national investment we can find. So much for general education.

What about Technical Education? This I think is very far from being in a satisfactory condition, and that a great deal of the money spent on so-called Technical Education is wasted. Technical Education, in my opinion, can only be carried out in specially equipped schools provided with highly trained special teachers, and taught at a time when the brain of the taught is in a right condition for receiving what is offered to it, and which cannot be at the end of a fair day's work. In my opinion it is a mistake to expect that a youth, after having completed his day's work, either in a school or workshop, should or can reap sufficient advantage from attending a night school for the purpose of receiving special education, to make it worth the labour and cost.

The practical education of our youths in engineering, and in allied trades, must necessarily be obtained in the workshop, as no workshop-school can be kept up to date in the methods and systems of construction, which are changing from day to day, and as these schools have not the incentive of commercial success to spur them on, there is not the inducement, even if they had the knowledge, to keep them fully abreast of workshop practice.

Speaking as one who has had something to do with youths who have had a so-called practical training in these school-workshops, one of the first things to be done with them is to unlearn them in almost all the things they have been taught. I would have it that when a youth had finished his general education on the lines I have previously drawn your attention to, he should spend two to three years in the workshop, and then if he has the desire and the mental ability he should continue his workshop education as a half-timer, and the remainder of the day should be spent in a technical school furnished with the requisite teachers and appliances.

I think the variety, in combining the practical and the theoretical, would be a sufficient inducement, together with the hope of the advantages that would accrue to him, to induce him to take the fullest advantage of both.

If such a system were generally adopted, I think the advantage resulting to the employers would in the long run amply compensate them for what at present may seem some disorganization in the shop, and for the cost of the youth's time and wages whilst attending the school.

We shall shortly have in this city a school which, I am given to understand, will be in its equipment second to none of the technical schools of the Continent or America, and I have no doubt those who are responsible for the inception of this school will see to it that the professional staff is of an equally high class character. Will the youths and our young engineers of this great engineering centre take full advantage of this splendid opportunity to gain the necessary knowledge, so that the engineering of the twentieth century shall eclipse that which we, who have grown old, have achieved in the nineteenth century ?

I do not feel that it is incumbent upon me in this address to go into details in working out any system or scheme of education, but I content myself by drawing attention to what I think will be admitted as a necessity of the day.

At the same time I should like to draw attention to one feature of engineering education which does not seem to have received much attention, and that is the combination of the artistic with the useful. We seem to have concentrated our attention to the utilitarian side, and if in doing this any grace has come into the design, well and good, if not, then there does not appear to have been any effort made to introduce it. The Paris Exhibition was to me an object lesson on this point, for

in many of the exhibits appertaining to engineering there was a combination of the two, which whilst very pleasing to the eye admitted of no fault being found with the mechanical construction. Whilst bringing this indictment against ourselves, I think it is only fair to say that so far as locomotives are concerned we certainly lead the world in the combination of the useful with the beautiful, and further, I may say that our cousins across the Atlantic are far worse sinners than ourselves against the canons of good taste.

THE MACHINE QUESTION.

At the present time there is a matter of vital importance in front of engineers and the mechanical trades generally. I refer to Automatic and semi-Automatic Machines, their use, and the men who have to use them. As you all know the machine question was one of, if not the principal question that led to the great strike and lock-out of three years ago. This question, in an accentuated form, is again coming to the front, and it is the fear of trouble again arising on this matter, which is no doubt hindering to a large extent the adoption of these labour-saving machines in our workshops. How far is the fear of the consequences to deter us from adopting what the condition of the times and of outside competition will in the very nature of things force us to adopt, is a question which will have to be solved (and I hope once for all) ere long, as the forces of Trades Unionism are again being got into line to oppose the introduction and the use of these necessities, and the history of the early days of the 19th century, in a modified form, is, it is much to be feared, about to be played in the early days of the 20th Century.

It is not within the personal recollection of any of us, the opposition that was made to the introduction of machinery for the manufacture of yarn, and of the power loom for weaving,

but we all know that very strong opposition, which extended to rioting and even loss of life, did take place. I am by no means anticipating that anything of the nature of lawlessness will take place, but the opposition to the introduction of machinery in the early days of the 19th century has by no means been eliminated, and we are not yet educated up to the point at which the introduction of labour-saving machinery, and consequently greater producing plant is welcomed by the bulk of the population.

In an article in *Cassier's Magazine*, on "British Trade Supremacy," the following remarks occur:—"Britain was the first smelter of iron ore amongst modern nations, but it is open to doubt whether there is in Great Britain a single blast furnace that can compare in capacity with the best furnaces now smelting iron in America for shipment to Europe. In the matter of industries we conceive that the real trouble may be summed up in four things—Over conservatism—Imperfect distribution of labour—Insufficient specialisation, and the tyranny of Labour. The greatest blow to British Industry was dealt when the trades unions were allowed to get their hands into works management. The 'Shop Steward' is the curse of masters and men alike, for his mission is to see that every man does the smallest possible amount of work spread over the longest posible number of hours."

"No industrial system can survive the blighting influence of such practices as were revealed during the engineers' strike, and which prevail more or less—generally more—in all the industries in the country in which trade unionism is strong. The century upon which we are now entering will witness such a contest for supremacy in trade as the world has never yet seen, and under conditions of which the world has only begun to have experience. At the beginning of the 19th century the United States, as an industrial factor in the world's economics,

were a negligible quantity. At the beginning of the 20th century they seem to hold the key to the situation."

Can we say that the words are untrue, or can we say that they are overdrawn? I accept them as being a fair statement of the condition of things as at present existing. The four cardinal points mentioned in the article I endorse to the fullest extent, and can only urge one word in justification of one of them, "insufficient specialisation," and that word is that most of our English businesses have grown from small beginnings, and at a time when requirements were less; when a man to keep his works going had to turn his hand to whatever work came in his way. This reproach I think is gradually being removed, and I think we shall travel faster in this direction than we have hitherto done. Our go-ahead friends on the other side of the Atlantic have profited by our experience and mistakes, and have, as they always aim to do, gone one better than we have.

To confirm my opinion as to the action of trades unions with regard to the introduction of labour saving machines, I give you an extract from an article by a labour leader, which appeared in the *Manchester Evening News* of the 5th inst. "We are living in the age of machine inventions and improvement. The 20th century will, undoubtedly, mark advances hitherto undreamt of in this respect. No matter what the trade unions may say it is inevitable that automatic machinery should be watched by what is termed unskilled labour. Automatic machinery ought in the very nature of things to be watched by automata. Men with highly trained intelligencies should never allow themselves to be reduced to the level of self-acting machinery; such work belongs to a low order of intelligence, and the wages of skilled labour cannot permanently be insisted upon for the performance of duties which of right belong to the unskilled. The Amalgamated Society of

Engineers may oppose the alterations as much as it pleases, but it is inevitable that the change from skilled to unskilled labour in the minding of automatic machinery should be made.

I hope as well as believe that the century upon which we have entered will mark two great changes in the sphere of industry :—

One is what may be termed the interchangeability of labour, and the other the specialisation of industry. The Americans have led the way in both, and they are our greatest industrial competitors. By the interchangeability of labour I mean the granting of the privilege and power of any workman, no matter how lowly he may be in the industrial scale, to rise to higher positions and grades, according as opportunity presents itself, and as his knowledge and skill develop. The comparative success and prosperity of American manufacturers is almost entirely due to the fact that they specialise and work to standards, while our manufacturers try to do everything, and as a consequence fail to conform to the modern requirements of efficiency and despatch."

I am not always in agreement with the expressed views on labour questions by the labour leaders, but I agree with the writer's views on this particular question.

Mr. Henry Webb, in proposing a vote of thanks to the President, said:—As your Past-President, and on your behalf, I wish to tender to our worthy President our hearty thanks for his weighty words to-night. There is an old adage which says "Custom makes the law," and in accordance with that a Presidential Address cannot be discussed; but, perhaps you will permit me, if not to discuss the address, to make two comments. First, I note in the first part of his address he touched upon the great question of education, a question to which we have

all devoted a considerable amount of time and interest during the last few years.

It is a big question, full of difficulties, and one that intimately concerns all our interests, and although it may seem egotistical, it would be very easy for me to take up a considerable amount of time in dilating upon this subject. I would however draw your attention to one point in case it should be lost sight of, namely; we have, in my opinion, sufficient money in this country for every educational purpose without the necessity of the slightest increase in taxation if the funds were rightly applied. The great desideratum of the present day is a better system of co-ordination. The country should be divided into educational areas, that may be brought under the supervision of local authorities, who should have power to administer all kinds of education, from the lowest to the highest. By this system the extensive overlapping would be obviated, and the enormous waste of money avoided. In my opinion the time will come when the nation will ultimately rise up against the enormous waste of money that is presently accruing in regard to the educational systems.

In regard to the second point alluded to by the President, it would be easy to comment on this at considerable length, because it is a weighty and difficult question, and one that we should be chary of discussing without careful consideration. At the same time I have been long convinced that if England is to keep its supremacy we must learn one lesson, and that is that the interests of employers and employees are one. We want employees to know that employers are their best friends. At the same time it is of the greatest importance that the employed should be firmly convinced that the English employers can make no progress unless they are able to apply all the systems and advantages which accrue in continental places and the United States of America. Assuming that there are no difficulties

placed in the way of enterprise and progress in regard to these essential points, there is no doubt that England will hold its own in the competition of the future.

The proposition was carried with acclamation, and Mr. Hodgson briefly acknowledged the same, and the proceedings terminated.

SCHOOL AND WORK.

Discussion Introduced by The President

(Mr Henry Hodgson),

At MEETING, FEBRUARY 9th, 1901.

The President said:—I have received the following letter from the Home Department:—

Secretary of State—Home Department.

January 23rd, 1901.

Dear Sir,

My attention has been called to your very interesting address to the Manchester Association of Engineers.

The Secretary of State for the Home Department and the President of the Board of Education are about to appoint a Departmental Committee to enquire into the employment of School children. This raises the question how far they ought to remain at School or to go to work before they are 14.

If you have any opinions on the subject, or if your Association could help us in arriving at a knowledge of the opinion of the Engineering trade on this question, I think it would be of great use.

The names of the Committee will shortly be made public.

I am, Yours very truly,

Signed HENRY CUNNYNGHAME,

(*Assistant Secretary*)

I replied to the letter that I should be glad to assist the Committee as far as possible, and that I had no doubt I might say the same for the Association, and my object in bringing it before you is to give you the opportunity of formulating your views, and so placing myself and the Council in the position of assisting the Departmental Committee proposed to be formed to develop the scheme they may be contemplating.

The question of what may be a suitable age for a youth to leave school and commence what is intended to be his life's

work is one that cannot be settled upon mathematical lines, as so many influences of the widest possible character are brought into the settlement—such as mental capacity, environment, temper, disposition, energy, conditions of health, monetary requirements, and many more, not excepting the human element.

There are, moreover, three widely different interests to be taken into consideration:—First the Youth, who certainly has a very close interest in the matter; Second the Parent, who must take the second place; and Third the Employer, whose interests whilst important are subsidiary to that of the other two.

The Youth.—One of the great difficulties in dealing with boys who are approaching a suitable age for commencing work is the strong desire they all possess for a change, the discipline and monotony of school life acting upon them with such force as to lead them to think that anything will be better so long as it is a change. This I think is the factor that will first have to be taken in hand, and school life so ordered that a youth at school at such an age shall find that school life can be made so nteresting that, while not eliminating the desire for change, which is inherent in the youth say from age 12 and 13 to 18 or more, it shall be so counteracted that he may not only be willing but be actually interested in the pursuit after a higher standard of education.

Education, in the majority of cases and to the majority of boys, is not made sufficiently interesting. To most it is a dull round of what appears to them to be useless cramming, and one of the first things to be taken in hand is not only to make learning interesting, but to make the boys think so; this will have to be done by having great variety in the lessons and a sufficient number of competent teachers, so that the classes may not be so large but that each teacher can take a direct personal interest in each boy.

As far as possible, and this is a very important matter, it should be ascertained what is the particular bent of the individual youth, and the later stages of education should be to equip him with knowledge and information in this particular direction.

Another feature, and I think a very commendable one, is the desire strongly manifested to be earning wages. We all know with what pride we took home our earnings in our early days, and although it is some time since I had this feeling in my own case, I have no doubt it prevails equally strong in the boy of to-day.

All this points to the difficulty in front of any scheme for giving better education to the youth of the present and future generations, which necessarily will entail a longer period at school, and therefore a raising of the age before the period of employment commences.

The Parent.—In many cases it is a matter of great importance pecuniarily, that the children should commence earning wages at as early an age as possible, and change the youth from an outgo to an income to the family exchequer.

Education at present up to a certain standard is much less costly than it was a quarter of a century ago, but even to-day education means a certain amount of expenditure even to the poorest, and the school boy is notorious for the amount of wear and tear he can make and which means cost to the parent. This to a certain extent ends when he commences working, and something coming in takes the place of the otherwise something going out. This has a material tendency to shorten the period allowed for education, and this presses the more heavily on that class whose education requires to be more generally developed. It will in the long run pay the parent to still further develop the virtue of self-sacrifice, and continue the

boy at school for a longer period that he may obtain a better education, and so better equip him for the battle of life.

The Employer.—The employer stands altogether on a different platform to either of the other two. His interest is to get a better educated class of employees, for whatever the kind of employment, the workman who has the power of thinking will naturally make a more helpful workman than one who has only the rudiments of this power; this applies with striking force to the engineering trade, where in every branch or department the power of thinking on right lines has a material influence on the quantity as well as the quality of the work performed. I think engineering employers are all pretty well convinced that to raise the age when a youth should commence work would be to his advantage, and if the extended period is spent at school acquiring useful knowledge, that it will be to the advantage of the one who will ultimately be his workman.

A youth at 16 may reasonably be expected to be more staid, and have a more definite view of his opportunities and responsibilities than one of 14, and although the period of apprenticeship may be shortened, I venture to say that as a workman, when he arrives at that stage, he will be the compeer of the one who commenced at the earlier period, and certainly if the two years has been fairly well spent at school, always provided that the schools have kept the boy interested for the extended period.

Summarising what I have said, I am of opinion that the school period should be extended, and that schools should be so organized that the curriculum for the extended period should be such as not only to keep the boy interested in his studies, but that his studies should have as direct a bearing on his future occupation as possible, and so ensure that the working man of the future should be in advance, and as far as possible in advance of the present workman, as the scientific requirements of the future appear likely to demand.

Mr. Henry Webb (Past President) said the question of "School and Work" was a difficult and complex one, and the conclusions arrived at depended on the point of view adopted in regarding it, as the subject was so many-sided. Taking the question as it affected the mechanical engineering trade, they might consider the cases of the operative, the employer or manager, and what he would call the distributing element.

He agreed that the employees would benefit by a better education, and as to whether the minimum age of employment should be 14, 15 or 16, was a point on which no doubt the meeting would be able to express some definite opinion. Of course a great deal depended on the mental capacity of the youth and his environment. One important point was that at whatever age the youth came to the works to learn the mechanical operations, facilities should be given to him to continue his education at evening continuation schools, or better still, the employer might make arrangements to send him on one or two afternoons a week to some Technical Institute, where there were special facilities for showing him the principles underlying the operations he was called upon to perform. They should lay special stress on the importance of compulsory attendance at evening schools, or additional facilities being given by the employer in the day time at some part of the week. In all their education he thought they should bear in mind, first, the moral training of the youth; second, the intellectual training, to make him think; and next, the intellectual training should take a bias towards the future position in life he was likely to be called upon to occupy. At that point, of course, there came in the question of technical education.

Dealing next with the education of the employer or the manager, they would have exactly the same training as others up to a certain age, a training to develop their faculties. But, by their position being able to allow their sons to remain at

school or college for a longer period, they would have the advantage of a higher education, and it would be well if such included the classics. It had been conclusively proved to him by employers who had enjoyed such an education, that the mental training obtained in studying the classics had been of great benefit to them. Taking the third class he would lay particular stress upon the education of the distributing element, which he thought was not receiving sufficient attention in this country. The distributing element was a very important factor in any establishment, and any man engaged in it should be well educated, able to express himself clearly, of ready resource, and possessing a knowledge of the geography of the world and the products of various countries, whilst he should also be a good linguist. He should also be well up in political economy and the principles of supply and demand, and above all, should have an ample share of what they in Lancashire called *nous*. The above were a few of his ideas as to the proper education of the three principal classes, but he did not, of course, mean that facilities should not be given to enable anyone to rise to the highest rung of the ladder; in fact, the proper grading of education would be an important factor in this direction.

Mr. J. H. Reynolds (Director, Manchester Municipal Technical School), said he was glad that the Board of Education was beginning to seek for information, as it was high time that that body brought itself into touch with the great industrial needs of this country. There had too long been too little thinking at the head of affairs, and hence the present muddle and chaos in regard to the great question of education. With regard to Mr. Webb's remarks, he would urge that it was no part of the business of education, so far as it concerned our young people, within the present school age limit of 14, to take

any account of what was to be the future of those boys and girls. Their business was to train them and educate their faculties on broad lines, so that at a certain age they would be able to enter upon any given employment with faculties well disciplined, both morally and intellectually, and as intelligent thinking beings. They were not getting the "thinking being" now. They were in many cases simply getting a boy or a girl crammed to pass certain examinations. That, he urged, ought not to be the object of school life. Engineers naturally said that if a youth was going to be an engineer they must train him in that bias, and the question of manual training came in.

He would commend to them the opportunity of which the Chairman had spoken, of visiting the Exhibit at the Higher Grade School, and seeing for themselves what the best minds in America meant by the term "manual training." It took no note of the future of the boy or girl. The boy might become an engineer, a doctor, a lawyer, or anything else, but manual training for the youth meant the right co-ordination of eye and hand as a measure of discipline, and of cultivation of faculty.

Up to the age of 14 or 15 he did not care what the boy was, he was entitled to the best education that could be given. How many men were there in Lancashire who at this moment occupied extremely important positions as leaders of industry, or leaders of men, who at 14 or even 20 had the slightest idea of even taking up such positions? They could not tell where the future genius might be, and up to the age of 14 or 15 the education in schools ought to be so organised that the one thing studied was the intellectual and moral discipline of the boy or girl, so as to make them good citizens.

There was an idea in some quarters that the instruction in schools should be arranged in accordance with the industries of the locality. He thought that if they did that they would be doing the children of the locality serious harm. The fact that

their men of genius and talent had sprung from all parts of the country pointed to the importance of taking general rather than special views in the education of the children. He was glad to hear Mr, Webb speak with approval of the idea of letting apprentices have, say, two afternoons a week off, so that they could attend some properly staffed and equipped technical school. If employers would only let those who had the management of such schools know what they wanted, he was sure satisfactory arrangements could be made. At any rate he was sure his own Committee would be delighted to put the large new school they were building at the service of the great industries of the district.

The Board of Education and Home Office, in seeking information, would naturally find a very different response from different parts of the country. In many districts there was great difficulty in keeping the children at school beyond certain ages, owing to the industries of the district requiring their services at as early an age as possible, and there was also the half time question which was still favoured by many parents; but he thought that when they considered what other poorer countries than our own were doing, in the way of keeping the children at school up to a certain minimum age, they would see no reason why we should not make some improvement in this direction. Then again, the education should be made as human and interesting as possible, so that the boys would take delight in what they were doing. If that were done boys would not be so ready to leave school as they were now.

The statistics as to the proportion of boys at the schools that were in the seventh standard bore eloquent testimony of the low condition of education. He thought sometimes that if they were to shut up every technical school in the country and devote the money to secondary education, pure and simple, of an entirely general character, they might perhaps be doing even greater

good than by building new and costly technical schools, such as the one in Manchester. It was, however, no use raising the standard of general education until the employers would take youths at a greater age. He might here mention the system at Messrs. Brown & Sharp's, in Rhode Island, who told him they would have no boys there under 17, and in addressing the apprentices he was struck with their brightness and intelligence.

In concluding his remarks he might say that he felt very keenly on the matter. When they looked at the child population, which numbered 6,350,000, which should be attending school, and find an average attendance of only 4,600,000, at 14 only 47,000, and in the seventh standard only 36,000, they saw that it was time to be doing something. If the school age were increased the employers would get a better class of boys, and if they asked for a better class the demand would induce the supply. This applied to all trades, and every one would benefit by the improvement in the education of the youth of the country. They must take the matter up thoroughly, and get people at the head of affairs to think about things which they had not done for a long while.

Mr. H. F. Massey said the question was being put in some quarters as to whether it was the case that the boys who passed the best standards at school went to the higher class trades. Statistics were being collected at the suggestion of the Education Department with regard to all young men under 21 years of age in as many trades and occupations as possible. The particulars requested were present age, age at which left school, standard passed at school, trade, and if possible, some general remark as to efficiency. It would be very interesting and important to know if the men engaged in the trades that required the greatest intelligence, and that

commanded the highest wages, were drawn chiefly from boys who had passed the highest standards.

Mr. W. Ingham said that on the question of the employment of young people a very formidable indictment could be framed against employers, particularly engineering employers, and perhaps in this district more than in any other. There were many parents who would be quite willing to keep their children at school for a longer period, but were met by the difficulty that many employers would not take lads above a certain age into the shops. If the employers of this district would accept lads at 16 or 17, they would have no difficulty in getting an ample supply. Employers might also allow the lads facilities for getting education during the day some time in the week.

Mr. Alfred Saxon said he left school at 13½, but he for one was certainly in favour of raising the age, and he would even be prepared to move that this Association was in favour of raising the age one year. He thought that for the good of the boys and girls of the country the minimum age for leaving school ought to be increased.

Mr. Thomas Ashbury said he was prepared to second such a proposition. He had recently been discussing the question with an educationist in this district, who expressed the opinion that no matter what was done in the way of technical education, a sound general education must be given, which was the only foundation on which any subsequent technical education could be based. Up to 14 or so the education must be general, and after that should be as specific as possible in the line the bent of the lad's mind seemed to follow, and employers ought to give their apprentices facilities for bringing out their particular talents in continuation or technical schools.

Mr. Joseph Nasmith said Mr. Saxon evidently had in his mind the raising of the age to 14 instead of 13, but he might point out that under present regulations a boy could be employed at an earlier age than 14 if he had passed through certain standards. The proper course was to raise the school age and make the lad remain at school. At present there was too much cramming in the system of education in this country, too much reliance was placed upon examination results, and a thorough re-modelling was required. They must look at the etymology of the word "education," which meant "drawing out" and not "putting in." Information was not education, but only the means by which they enabled the child to think for itself and draw its own conclusions. To achieve this desirable object they must have a properly graded system of education, which at present they had not got in this country, and the object they ought to have in view was not a specialised education, at any rate for children under the age of 14 or 15, but a general education which would teach a child how to think out any subject accurately and logically. That was, or should be, the true end of general education, whether classical or mathematical.

To illustrate his point as to the necessity of general before special education he might refer to the case of the electrical engineer. He laid it down, dogmatically if they liked, that the fault of electrical engineering in this country to-day was that so many men went into it who were only half trained, and who specialised before they had been educated in general engineering. They had discovered that at the Manchester Technical School, and had ceased to make the distinction between electrical and mechanical engineering which had previously existed, because whatever particular direction an engineer might take, there was the necessity in the first place for a good general training in engineering. That general

training in engineering, prior to special training, corresponded to the good ordinary education which should be given to school children before any attempt was made to give instruction in the direction of any special industry in any specified line. Until the mind was properly trained and educated in such preliminary fashion they should not endeavour to give any special tone or direction to the thought of the pupil.

The PRESIDENT said as he took it, the idea was not so much that there should be any particular age fixed, but that the standard of education should be raised. That was, that the time of leaving should be settled rather by a measure of capacity than by age, and that this standard should be considerably raised before the children were allowed to go to work.

Ultimately on the motion of Mr. ALFRED SAXON, seconded by Mr. THOMAS ASHBURY, it was resolved :—

"That in the opinion of this meeting it is desirable that the school age should be raised at least one year, and that as far as possible the standard of education should at the same time be raised; and further, it is of opinion that engineering employers would be prepared to accept a shorter period of apprenticeship."

CORRESPONDENCE.

In response to the invitation of the President for further views on the question from any members who were not present at the meeting, the following correspondence has been received.

Mr. J. A. SANER. In responding to your invitation to give my views on this subject I have to say that it is one in which I take great interest.

I am very much in favour of the age limit being raised.

Firstly—Broadly, because I think that by taking boys from school so early and confining them in factories and workshops for 10 or 12 hours a day, we are doing the rising generation a gross injury physically, and that we cannot hope to produce a race of healthy, strong, and active men if we commence to sap their strength at so early an age. In every other case of animal training, we are very careful not to overtax the powers of the young, especially if we wish to gain a prize or sell for a good figure at a mature age, and yet, although we know that a boy is not fully developed, either mentally or physically, before he is at least 18 years of age, we are only too anxious to employ him at a *low* wage many years before this. The number of rejections last year, when the medical examination of candidates for South Africa took place, *ought* to have opened our eyes, if it did not.

Secondly—Modern manufacture in all branches requires more highly trained men than the more rough-and-ready methods of our forefathers, and to obtain this better training surely it must be necessary to develop the brain to a greater degree than formerly, not only in men who are to take the more leading places, but also in the ordinary mechanic and tradesman.

Thirdly—Are we going to continue to throw away the services of very many who now, through want of means on the part of their parents, are unable to take the part which they should do in the development and maintenance of the empire at large? How much in spite of all difficulties does the empire—and for that matter the whole world—owe to the talents of those of humble birth, and is it not conceivable that given a better chance, by being kept under trained surpervision such as proposed by yourself, a number of talented men who now "go under" for want of training, would come forward and be of

much greater use than they are ever likely to be under present arrangements.

I do not think it any violation of the true principles of political economy to say that any new system of Education should provide for a gradual progress from the Board School to the University, provided the scholar is capable of such progress, but in any case I consider the age of 16 quite young enough to leave school, and do not think that with free education and the higher rate of wages, or as I would rather put it, the more even distribution of wealth, which is now taking place, there would be any hardship on parents.

After a boy has left school, should he leave at the age of 16, it should be made a *sine quâ non* for him to attend some form of instruction either during the day-time or in the evening, when he would learn the theoretical side of his particular trade.

I am not, of course, forgetting the physical training, but for those who were able to progress to the higher grades, physical exercise would be provided, as it should be, and very often now is, provided in the first grade.

Again, it has been recently demonstrated beyond contradiction that we must have men thoroughly trained, both mentally and physically, during their period of apprenticeship.

I therefore very heartily approve of the motion of Mr. Saxon and Mr. Ashbury as a move in the right direction.

Mr. James Saxon.—I am strongly of opinion that most boys leave school far too early to have received that foundation of education which is necessary at the present day, in the engineering trade especially. It is therefore most advisable that the present school age and standard of education should be raised before work can be commenced. I am of opinion that no boy should leave school for work until he has attained the

age of 14 years. Some boys are able to leave school at 12 years of age, having at that age passed the necessary standards under the present regulations.

It would be well if some additional means could be arranged for compelling those who leave school and enter a trade to continue in attendance at some Evening Elementary, Science and Art Classes. Such a course would be eventually a great benefit to the youths themselves, as well as to the trades in which they are employed.

Mr. J. Howard Hall.—I see no objection to the age of apprentices being raised before employers should accept them, it would no doubt improve the youth, and the employer would get better material to start working with. I should certainly object to the idea of allowing them an afternoon or two away from their work to attend classes; in our works we cease work at 5 p.m., so there is plenty of time to pass an hour or two at continuation classes. I think that Government should step in and insist that boys, and girls also for that matter, should attend continuation classes for a further two years. These classes being in elementary science subjects. Then another two years or more should be insisted on attendance at attending advanced science, technical or commercial classes.

Mr. W. Millar. In reply to your circular, I most respectfully submit to you that no boy under 15 years of age should be employed in or about engineering works, machine works, tool works, ironworks, &c., connected with the trade.

Mr. John Watson. I am of opinion that the standard of education ought to be raised to a much higher level, and the age question determined by some means whereby the progress of the lad in his studies would also be taken into account.

We must not forget that whatever the Legislature may enact, or however much the standard of education be raised, unless the machinery by which the system is worked be put in proper order the result will be disappointing.

Mr. Edwin R. Walker. With reference to School and Work I am very glad this subject is being taken up as I have been much interested in it. For many years when parents have brought their sons to me to have them admitted as apprentices into our works, I at once ask the ages of the boys, and unless they are 15 or thereabouts I almost invariably decline to receive them, but advise the parents to send them to school for a *general* education until they are 15. There are some few cases where the mother may be a widow and very poor, and where the few shillings the boy earns may be a consideration, that I make the exception, though I dislike doing so. The result of this is that I think we have a very intelligent number of apprentices and also of young men who have completed their time and remained with us.

Mr. M. Ingram. In responding to your appeal for further expressions of opinions on the above question than was possible to be obtained in one nights debate, I desire to express my pleasure and satisfaction that at last the Board of Education seek information from the very source which is the most interested, namely, those who are actively engaged in the manufacture and industrial concerns of this country, both employers and employees, such as is so well represented in The Manchester Association of Engineers.

As an employer I am strongly convinced it would be in the interest and welfare of employers in engineering works to extend the terms of apprenticeship and curtail its duration, in my own concern experience teaches that the early years of

apprenticeship is most unprofitable, and until about the age of 17 years or more be attained, very little attention, interest, or enthusiasm is infused into his work, and not at all infrequently he finds he has mistaken his vocation, and therefore doomed to work which is uncongenial and distasteful to him, and thus gravitates into the already large ranks of the inefficient and incompetent workman.

I advocate that we should have a national system of free education, say from the age of thirteen to seventeen or eighteen years, during which time physical, military, scientific and technical education, with manual training, should form part of the educational curriculum in properly constructed institutions, in healthy situations away from the evil influences of large cities, and under government control, the chief aim of which should be to create a sound and healthy mind in a sound healthy body; and thus produce a race of men of physique, with minds capable to devise, and hands capable to make all the machinery and other manufactured commodities with which, at present, we are threatened to have our markets flooded by our competitors.

With youthful materials then at command, already educated and disciplined and fitted by previous training and healthy surroundings, is it to be supposed manufacturers would fail to welcome such recruits into their workshops? I for one would twice welcome such promising materials, and rejoice to have such and pay such wages which would render them independent of their friends for support until such time as they were thoroughly qualified to take their proper rank and status in the trade they belonged.

Mr. William Heap. With reference to improved methods of education, I take it, that although the subject should be considered without reference to any particular line of business, we,

as an Engineers' Association, should treat it from an engineer's point of view only, leaving other professions to be dealt with by the gentlemen engaged therein.

We want men who can produce a maximum amount of work with a minimum amount of time and money, and such men are the backbone of our profession, and it plainly rests with our theoretical and practical schools to supply this want, and not by highly scientific experimental work alone, but also by actual manipulation of tools, in which the endless methods and shop "kinks" for the time and labour saving accomplishment of work, are impressed upon the student in no uncertain manner. The coming mechanic should be taught the value of time, should be trained to use his brains when he sees work being done in a tedious expensive manner and be able to conceive a quicker and better way, put his design on paper and bring it to a successful issue in the workshops, and there are thousands of brains that simply want the opportunity to develop, to do this. It is not sufficient to teach the young idea how skilfully a fit may be made, or how excellent a finish work may be given, but how to do a good, rough every-day sort of job.

Mr. T. Turner Hindle. Would the advantage of an extra 12 months schooling, viz., from 14 to 15 years of age, under the ordinary conditions of elementary schools compensate for the experience, practical knowledge, and wages gained at an Engineering or similar works? In my opinion it would not.

In the first place it is most difficult to persuade the average school boy that he is being taught for his future benefit; he scrambles through his lessons for the sake of pacifying his teacher. Now, if you send him to work he is delighted with the thoughts of leaving school, he earns wages, feels his own importance and responsibility, which makes him anxious and

desirous to obtain more knowledge than hitherto, his parents think better of him, and he is no longer the child he was,

Again at 14 a boy seems to be more tractable and obliging. Foremen and men taking greatly to these qualifications which are conducive to his welfare. He is also able to spend more time in each department.

Imagine a youth commencing to learn his trade in a machine shop, at the age of 17, and without the great factor influence, he would in all probability be put to mind a machine and classed as unskilled labour.

In conclusion I might say that in my opinion, the half-time system ought to be abolished, and that the minimum compulsory age for a child to leave school should be 14.

Mr. S. Rendell.—I heartily agree with all that has been said in reference to an extended term of school life and a higher standard of education. From my own experience of boys who have left school I gather that in the majority of cases some further general education would be a great advantage. Most lads in engineering works and offices, and in evening technical classes, are handicapped in the race by a lack of that ready intelligence which another year of interesting school study would give. All boys ought to be well trained in writing, drawing, arithmetic and accounts, English composition and literature, the history of their own country, general geography elementary science, manual exercise, and if possible, a foreign language and shorthand. The present period at school is not sufficient for this without cram, and it is not cram that is needed, but education, a drawing out of the latent powers and putting them into good form for use.

There is a great tendency to specialize too soon, forgetting that boys seldom give evidence of the kind of employment they are best adapted to until near the end of their school days. It

is a better foundation we need, and to further this end employers will not lose by shortening the period of apprenticeship. An afternoon or two a week for technical instruction is a good suggestion, which, with a little arrangement on the part of the heads of firms, could easily be carried into effect. It must also be borne in mind that in the technical schools the aim at first should not be to teach the details of any particular branch of the business, but rather those broad and general principles and processes which will readily apply to all the many ramifications of engineering.

Mr. Alex Rea.—Taking into serious consideration the keen competition that exists between the leading nations of the world for industrial and commercial supremacy, there can be but one opinion as regards the value of education if we are to maintain a leading position.

It is of the utmost importance therefore, that our boys and girls should have the best possible education, which alone can place them in truer relationship to the world around them, giving to every one the chance of showing what is in him, and also enabling him to make the best use of what faculties he possesses.

At the same time it cannot be too clearly understood, that education merely develops, it does not create, and while culture has its limits, it must be admitted that we are still behind other nations at present as regards education. And it will be several years before our people collectively can be as well educated as the German and American peoples.

Another obstacle is the necessities of many children's position, rendering it imperative that their help, however small, should be made available as early as possible.

I am fully convinced that boys, especially those who aim at following the engineering profession, should not leave school

before the age of 16, even if they have passed the highest standard. In addition it is also essential that during their apprenticeship they should attend continuation schools, so as to consolidate the information gained in the primary stages of their education.

There is also another branch of education which has been much neglected, viz., the physical development of children.

To attain this great end, the teaching in our schools should be broad, human, sympathetic and especially adapted to the capabilities of each boy and girl, it being impossible to train each mind to a dead level of frigid uniformity.

The teaching vocation therefore being one of the highest, it follows that those who are entrusted with the training and education of the rising generation, should themselves be well trained men and women of culture, large minded, with a general knowledge of human nature.

Mr. C. H. Collier. I quite agree the age of 14 years might be fixed as the earliest limit a boy should leave school, also that it is of the utmost importance that he should be so trained in the three R's, and as many other subjects as he can obtain up to that age, and if circumstances will allow him to still continue at day school to receive a higher class of education.

I quite admire the good feeling expressed by some of our employers in proposing to allow one or two afternoons to be be devoted to apprentices attending classes, but they must not forget the inconveniences their absence will entail. I think it would be far better if provisions could be made to give youths the opportunity of attending evening schools free of charge, as a good number of parents and orphan youths cannot afford to pay.

Taking engineering as my point, I think it requires all the time from 14 to 21 years to make youths efficient workmen, and

so enable them to produce work at a normal cost, and so compete with other nations. I certainly do contend that there is education to be gained in the workshop, and should be glad to see a better class of men obtained in a scientific and practical form.

Mr. John Dutton. I am in favour of an extension of the age to leave school, and I have not the least doubt but that employers would reap the benefit, and especially by giving their youths an opportunity for progress during a few hours during the week for further knowledge in their respective trades, as they would then begin to know what they required.

FORCED LUBRICATION.

DISCUSSION,

INTRODUCED BY MR. CHAS. DAY,

SATURDAY, FEBRUARY 9TH, 1901.

Mr. CHAS. DAY said that as he took it, forced lubrication meant the continuous lubrication of a bearing under pressure, and differed from the lubrication which had been for so many years adopted in connection with the main bearings of Corliss engines—that was by taking oil up to a distributing box, and then letting it run by gravity from that box to a bearing. He would deal first with the advantages of forced lubrication, and then with what might be urged against it. Amongst the advantages of the system was the fact that a film of oil was forced between the surfaces of the bearing at each reversal. He certainly thought that if there was any play in a bearing, when the reversal took place, the pressure of oil would shoot the oil into the gap. If an engine ran slowly, a low pressure was sufficient to shoot the oil in, as it had a longer time to act, but if the speed was increased a much higher pressure was necessary. Another point was that the bearings ran quietly without extremely close adjustment. Of course he did not mean to say they could afford to have slack or careless adjustment, but the bearings would run quieter than if there was no oil pressure put on to them. One engine he knew of knocked distinctly with 10lbs. oil pressure, but did not knock at all with between 25 to 30lbs. pressure. There was also reduced friction. He could not give figures to prove this, as these were difficult to obtain. An engine designed for forced lubrication was generally different from one designed for ordinary lubrication, so that any figures obtained scarcely afforded a fair basis of comparison, as they referred to engines of different types. The general freedom from hot

bearings, and lessened trouble in other respects led him to think there was distinctly less friction.

Then there was a saving of oil owing to its being used over and over again. This had been the practice in mills for many years, particularly in connection with main bearings, but not so much in regard to crank pins, crossheads, slides, &c. American engineers had adopted the idea of re-using all the oil distributed to the various bearings, but as compared with ordinary methods of lubrication and oil catching he certainly thought there was a saving of oil by the adoption of forced lubrication owing to the oil being used over and over again. Then there was the cooling action of the oil on the bearings. When they pumped oil on to a bearing with a pressure of 10, 20, or 40lbs. behind it, there was a very decided cooling action, owing to the great quantity of oil passed through the bearing. Further, higher bearing pressure per square inch and higher speeds were permissible. It was a common case that engines which had not worked well at all, owing perhaps to high pressure or surface speed, with ordinary lubrication, had worked well as soon as forced lubrication was adopted on them. Higher speeds were permissible because the pressure of oil served to force oil in between the surfaces. Turning to the disadvantages of the system, it might be said that oil pipes under pressure were liable to break through vibration, &c. The remedy was obvious, viz., good workmanship and perfectly designed pipes, and, possibly also, an air vessel on the pump to prevent shocks on the pipes.

Another feature was that the lubrication of the engine was dependent on a pump. This again was simply a question of good design. With valveless pumps there was no trouble whatever. He did not think he could trace a single case where there had been trouble with an engine owing to the breakdown of a pump of that kind.

Another disadvantage was that the condition of the oil was liable to change through repeated use. This particularly applied to poor oils which had an imperfect or fictitious body, as with these a sediment formed which affected the lubricating property of the oil. Then again some oils contained acids which acted on white metals, especially those having a lead or zinc base. Consequently if they used lead or zinc base metals they should have very pure oils.

A further point was that with forced lubrication they must thoroughly enclose the engine, because owing to the great amount of oil which splashed from the bearings, it would get all over the engine room, so that it was advisable to absolutely enclose the engine, which involved certain difficulties, as that of making the doors and openings oil tight and at the same time securing accessibility. This, however, was again a matter for careful consideration in the design. A further disadvantage was that dirt and grit accumulated in the oil which passed over the bearings. This could be remedied in two ways, which could be either used independently, or as was preferable, in conjunction. They could first take the oil to a settling tank and then pump from somewhere not close to the bottom. Next they could filter the oil—care being taken to have a thorough filter. If they adopted these two methods they could get rid of every atom of dirt. He had proved this in actual experience. The last point he would mention was the mixing of water with the oil. This was a distinct difficulty, and most engineers, to overcome it, put two glands, one on the top of the cylinder and the other on the top of the column, which at any rate to a large extent acted as a remedy.

Mr. Alfred Saxon said he was rather surprised that Mr. Day had not laid more stress on the fact that forced lubrication seemed to be only specially adapted to vertical engines. What

sort of appearance a horizontal engine would present, if so closed in as to allow of forced lubrication without a good deal of oil leakage, he scarcely knew. Mr. Day had summarised the advantages and disadvantages very clearly. He, Mr. Saxon, certainly thought there was a saving of friction with forced lubrication on high speed engines. He would like to know if Mr. Day had had any experience at all with forced lubrication on horizontal engines.

Mr. R. Gregory said it was a serious matter in high speed engines to prevent oil from going into the cylinder up the piston rods. The amount so taken up came to gallons per week. So far as forced lubrication was concerned, their firm found that in slow speed engines they had no trouble on account of splashing, the piston rods being farther from the wells; but in high speed engines, where the piston rods were lower down they experienced some trouble in this respect.

Mr. C. H. Berry said that "forced" lubrication only existed where there was an absolute force which forced lubricant on to a revolving shaft by separating the two rubbing surfaces. Unless there was this separation of the surfaces the lubrication was not "forced." He might also point out that the fact of pouring oil over and over again on the bearing exercised a cooling action did not mean that there was no generation of friction. It was true that the "fatigue" of oil affected its lubricating property. As to the amount of pressure, he had known it possible to put lubricant between two rubbing surfaces at 600lbs. pressure per square inch. It was quite possible to lubricate horizontal engines by pressure if the engine was properly designed for the purpose.

Mr. A. Etchells referred to the tendency of the oil to creep along the shaft, and the various devices that had been made to

catch it. With regard to the pump question, a suggestion had been made to him that in addition to an air vessel there should be some kind of accumulator action, such as could be got by boring a 2in. tube and loading it with a constant weight. This he thought might ensure an even action. It also seemed possible to devise some kind of electrical alarm to give notice at once of any breakdown, so as to prevent disaster. As to water mixing with the oil, was there no lubricant that would take water into itself and still retain its properties as a lubricant?

Mr. T. Walton said lubrication was forced when the oil was placed in positions that were practically inaccessible to a stream of oil simply allowed to run on to the shaft. The best example of forced lubrication was the case of a footstep for a large upright shaft, 7in. or 8in. or 9in. diameter, for a mill five or six storeys high. He knew several cases where a force pump had been applied to the centre of the steps, and this became a hydraulic pump, lifting up the shaft at every pulsation. As to pumps for forced lubrication in high-speed engines, and the amount of power saved by reduced friction, it might be asked whether or not this was neutralised by the power required to drive the pump. He thought there would be difficulty in applying forced lubrication to crank pins, especially with high speeds, particularly in connection with the wear and tear of the connections. There were many advantages in forcing a semi-solid lubricant on to a bearing, which largely got over the difficulty of oil being distributed all over the engine house, &c. This meant a large saving in cleansing waste.

Mr. C. Walmsley said he knew of a number of high-speed engines running with oil mixed with water, soda, and sweet soap, and this, he was told, acted exceedingly well—even better than oil alone. There were some both at the Horwich Works

of the L. & Y. Ry. Co., and under the Hunt's Bank Offices in Manchester. They were not running with forced lubrication. This somewhat affected the question as to water mixing with the oil and destroying its powers of lubrication. An important point in connection with forced lubrication was to have good joints to prevent leakage, and if that were done and valveless pumps used there should be no difficulty.

Mr. Henry Webb said he had a high-speed engine, 100 HP, at 450 revs. per minute. Oil was forced in at a pressure of 25lbs. per square inch, and there was no stand-by. It had been working night and day for over two years, and they had never had to stop for anything; there was no difficulty with the oil. It was one of Bellis's high-speed engines, with a pressure on the piston of 125lbs. per square inch. The work was exceedingly irregular. This seemed to clash with Mr. Saxon's opinion on the matter.

Mr. L. Massey said that at the Paris Exhibition eleven years ago he remembered seeing a certain railway which ran with a flat slipper, water being forced underneath. This was rather a noticeable instance of water lubrication.

Mr. J. Mitton said that for flat surfaces it was possible to divide the metals, but for circular bearings it was impracticable to pump oil so as to actually divide the metals of a bearing.

Mr. C. H. Berry said it was not impossible to separate circular bearings, and he had seen it done to the extent of 100lbs. pressure per square inch.

Mr. W. Ingham pointed out that the soda in the mixture referred to by one speaker would have a saponifying action on

the water, and thus they might get a lubricating action that they would not have if the soda were not present.

Mr. H. Hodgson referred to a case where an upright was kept cool by water being forced under it at a pressure of 150lbs. per square inch, and they could distinctly see the pulsation every time the pump made its stroke.

Mr. W. Stead wrote—I should like to make a few remarks on the subject under discussion at the last meeting.

Referring to the question of the amount of play in bearings, I have purposely put in two pieces of thick cardboard between the joint of brasses and put the engine on load at 420 revolutions, and with 25lbs. oil pressure, could hear no knock.

As regards the engines showing a greater mechanical efficiency with forced lubrication than with splash lubrication: single-acting engines of 100 K.W. capacity, with splash lubrication, generally give about 80% to 82% combined efficiency; on the other hand we obtain regularly 85% to 86% on the double-acting forced lubrication type.

With reference to the amount of running that these plants will stand, I know of some cases where they have been at work night and day for over two years without having a bearing closed, particular attention being paid to the purity of the oil. There is no difficulty in keeping the oil from the L.P. cylinder nor the water from the glands getting into the frame.

Regarding Mr. Saxon's remarks that it was essential to have duplicate plants for fear of breakdown, this is preposterous, as my firm have running, at the present time, engines of from 1,500 IHP to 10 HP without a spare, and these engines overloaded at times to the extent of 25%. We also have engines of the high speed type as large as 900 IHP at work driving paper

mills, and these have no spares, and have not the advantage of being shut down at meal hours for attention.

We are all aware that oil is one of the most searching liquids known, and therefore must have special precautions taken to prevent its creeping action along shafts and through joints. Mr. Walton asks if the power exerted in pumping the oil does not counterbalance the gain due to reduction of friction in main journals. This is not so, as the power required on a 150 HP set is not more than quarter of 1 % of the total. The troubles that high speed engine makers have to contend against are—First: Want of attention to the oil in the chamber. I have seen cases where thick cylinder oil and castor oil were mixed and put into the engine base, and of course in a few hours' time this mixture was so thick that one could stand a two-foot rule up in it. Second: Want of attention to drain arrangements, &c., specially with ejector condensing plants. The water is allowed to collect and back up on the low pressure cylinder, and the consequence is a breakdown. They attempt to repair the job themselves, and if the connecting rod is strained they send it to the smithy to be straightened, and it is put back in the engine straight from the smithy, and of course something has to be out of line. This sort of work might do for slow speed engines, but not for those running 450 revs. per minute, where everything must be dead in line and square, if silent and free running is desired.

Mr. C. Day said he considered lubrication "forced" when applied under pressure. The matter had been spoken about as if forced lubrication meant nothing if the oil did not actually force the surfaces apart, whereas it really meant a good deal, apart from that. He did not think the idea of forced lubrication at moderate pressure would apply to dead steady-loaded bearings, or bearings that did not work under reciprocating pressures. In those cases they had no gap, and the low

pressure would be of no avail. Mr. Gregory raised the point of oil getting into low pressure cylinders. This was certainly a disadvantage. The only remedy seemed to be carefully designed glands on the top of the columns as distinct from the cylinder glands. The trouble could only be got over by well-designed glands of that kind. He did not know of a case of forced lubrication on a horizontal engine. His remarks had reference to high-speed engines, most of which were vertical. It would be difficult to enclose a big horizontal Corliss mill engine thoroughly so as to permit of forced lubrication.

Mr. Walton mentioned the loss of power taken up by the pump as counterbalancing the gain in friction. This loss of power was a very small thing when compared with the distinctly reduced friction on the bearing, and consequently reduced wear and tear. He thought that on that point the advantages outweighed the disadvantages. As to crank pins he did not find any difficulty, such as was referred to by Mr. Walton. As to water and oil being mixed and forming a good lubricant, no doubt this was possible, but if they had a forced lubrication engine, and got water down into the tanks or wherever they pumped from, they were liable to pump water only, and the result would not be satisfactory. In Willans' engine the mixture was dashed about, and kept in a constant state of mixture. With ordinary types of engines, however, and pumping from a well, they got the water separating from the oil, which caused difficulty.

TOPICAL DISCUSSION.

SATURDAY, MARCH 9th, 1901,

INTRODUCED BY

Mr. DANIEL ADAMSON,

OF HYDE.

"ELECTRIC VERSUS ROPE-DRIVEN TRAVELLING CRANES."

At the request of our President I open this discussion this evening. I may say that by "electric cranes" I mean the crane that has an individual electric motor for each motion; the crane that has only one motor being, in my opinion, something worse even than the rope crane.

The chief advantages of the electric crane are *higher speeds*, with easy control, and *saving in power*, with reduced wear and tear. The electric crane is usually controlled from a cage under one end of the crane, but for several purposes it is an advantage to control the motions from the floor (doing so very often saves the wages of one man, besides allowing the operator to stand by and see exactly what is required), but this is not nearly so easily accomplished on a rope crane. It means a complicated arrangement of rods and levers, while with the electric crane it is as easy to arrange for control from the floor as from a cage. Six out of seven electric cranes in our own shops are controlled from the floor. In some instances the user wishes to control the crane from a fixed point. We have a small crane in the Royal Mint controlled from one corner of the room, and I would like the advocates of rope cranes that are to speak to-night to tell us how they would do this.

The rope-driven crane is limited in speed by two things, the capacity of the rope to transmit the power required for faster hoisting, and by the fact that the speeds of the motions are practically fixed quantities with a given crane; the only means

of variation being by slipping the belts. This means that the crane starts too suddenly, if geared for a high travelling speed, and makes the load swing. Some years ago, in our own shop (before we changed our rope cranes for the electric driven ones) we altered the gearing of the cross traverse motion of one of them from about 50 to 60 feet per minute, and our men complained that this speed was dangerous owing to the load swinging. Our electric cranes now run up to 200 feet per minute, and one that only ran 80 to 100 feet was called (if I may be allowed to quote our foreman) "very slow," until we altered it like the others.

The explanation of this difference is that although the electric cranes are geared to run much faster than rope-driven cranes, yet the gradual start from rest allows this speed to be attained without objectionable swinging. It is all a matter of the acceleration of the load and the more gradually a crane attains its maximum speed the less will the load swing. For some purposes, as in erecting or foundry work, it is necessary to run slowly for a considerable time, and this can only be done on a rope crane by a troublesome change of gearing, while on an electric crane it simply means not moving the controller handle fully over until full speed is required; it is available however immediately the delicate operation calling for slow speed is complete.

The other advantage I mentioned was saving in power. To drive the rope alone takes a considerable amount of power, in some instances as much as 5 HP per 100 feet length of shop, and where this amount is smaller it means that the capacity of the rope for doing work has been reduced to too low a limit by reducing its speed. This waste of power is going on the whole time the crane is in use, whereas with an electric crane any waste of power that there is only continues during the actual movement of any given part.

This saving in power alone is not a very great matter, the total cost of power in an engineering shop is only a small percentage of the total cost of production, but when you consider that this wasted power is spent in wearing out your ropes, bearings, spindles, etc., you will realise the advantage of saving it.

Higher speeds, improved control and reduced wear and tear all mean reduced cost of production both directly and indirectly. To illustrate the indirect advantages of electric cranes I would like to tell you of a recent alteration we have made in one of our shops. Six years ago we considered that it was good practice to drill our boiler shells on "combination" machines that drilled first the circular seams and then the butt straps, the advantage at that time being that we saved the labour of moving the rings until the drilling was complete. Since the installation of our electric cranes and taking notice of their handiness and convenience in moving the rings from one machine to another we have realised that it is better to do separate operations on different machines instead of having half a valuable machine always idle. We have recently re-arranged this part of our boiler shop on these lines, and are sure we should never have done it if we had had to depend upon rope cranes to handle the rings.

Mr. Thos. Whitehead said he had a 10 tons overhead rope crane that had been erected ten years ago, and it had not cost £5 in repairs. When Mr. Adamson had had his cranes the same length of time, and they had done a similar amount of work, he would be glad to know what the bill for repairs was. At the same time he believed that electric cranes were the cranes of the future—there was so little gearing about them. He noted that at a meeting of the American Foundry Managers' Association, one of the speakers said that electric

cranes had given them the greatest possible satisfaction. If a crane proved suitable for foundry work, that was as severe a test as it could undergo. His own experience of electric cranes was not great, but if he were putting a crane down to-day he would certainly go in for electric driving. The speeds attained by some of the electric cranes were truly wonderful.

He noticed that in the electric cranes at the Paris Exhibition, great attention had been paid by foreign builders to points which he thought should be observed in all good cranes. They were made with cut gears; the worm ran in an oil bath; the worm shaft and the hook were fitted with ball bearings; all the motions were brought to the cage; and every handle, in some makes, was made to turn in the direction in which the load was required to move. These were evidences of careful design that were worthy of note.

Mr. Will. Heap said he scarcely concurred with Mr. Adamson when he expressed the opinion that a one-motor crane was worse than the old rope crane. In a pretty large travelling crane they could spend as much as 10 HP in driving a longitudinal rope, but when they put a motor on the crane they did away with that 10 HP, so that there was a distinct saving. It was not always convenient to spend a lot of money on a number of motors, and to say that one motor was worse than the original rope crane was to bar many from putting down a one-motor crane, when this might be an improvement on the old *régime*. Of course no one would deny that one motor for the motion was the proper thing.

The method of obtaining a slower speed by the aid of the controller referred to by Mr. Adamson, would, he took it, be very wasteful, as the current would have to be choked down, and if it was done in the field of the motor there would be heavy sparking at the bushes owing to the distortion when it had to

run quickly again. He would like to know something more about the controller; Mr. Adamson had not mentioned what kind he used.

He thought worm gears ought to be eschewed altogether, whether running in an oil bath or otherwise. Spur gear was preferable.

As to the handle of the controller turning in the direction of motion, that was all right until they got it on a jib crane.

Personally he did not think the rope crane really needed discussing, but the question of controllers, the kind of motor, and the application of these in connection with electric cranes might be usefully considered.

Mr. Alex. Rea, in addressing the meeting, said that he was somewhat taken aback at the reticence shown by the members in discussing such an important subject, taking into account the large additions to the membership which have occurred during these last few years.

However, be that as it may, he would claim their kind indulgence when making a few remarks on a partially electrical question in the presence of so many electric experts.

In reference to rope-driven cranes it must be admitted that a well constructed cotton rope traveller, when carefully built and designed, having all the working parts in perfect alignment, more especially with the worm gears correctly made, is an excellent hoisting machine, and far superior to any other form of crane, save those on the electric principle.

It is scarcely correct therefore to say that rope-driven cranes are antiquated, as in point of economy and efficiency they are quite equal within a certain ratio or limit to their electric rivals. The advantages claimed largely arise from other causes. Assuming therefore the power developed as equalling 100, the loss of efficiency in a high-class cotton rope traveller, taking a

shop of moderate length as an example, will not exceed more than 50 %, which is considered good practice for electrically driven cranes with three motors.

In this regard it should be stated that where the worm gears have been badly designed the loss of efficiency has equalled 75 % to 80 %, but with properly made worm gears the loss is no more than what arises from ordinary spur gearing, this having been demonstrated over and over again by actual experiment. Hence the case, for a cotton rope traveller is not so bad as it appears from Mr. Adamson's opening remarks, as for economy of power it runs its electric rival very closely.

In discussing the question of electric cranes it is always a safe maxim to assume that a good deal can be said upon both sides, and further that electrically driven cranes are not always perfect, but have their drawbacks as well as the cotton rope traveller. At the same time when the electric crane is well constructed and fitted with three reversible slow speed motors and efficient resistances, &c., it is one of the most perfect hoisting machines now manufactured, and for foundry and general purposes is probably unequalled, owing to its wide range of speeds and ease of control.

In addition it should be stated that electric cranes, in their vital parts, as made by a few of the leading firms, are quite equal to a first-class machine tool, what with cut gear wheels, ball bearings, &c., for the longitudinal, traverse journals and so on, inclusive of efficient motors with controllers suitable for the purpose required, it altogether becomes a splendid piece of machinery, and should give no trouble whatever in working.

The chief advantages therefore may be summarised as follows:—

1st. The increased speeds which can be attained, in fact anything in reason; this being of vital importance, especially in long shops when moving objects longitudinally or traversely,

lifting not being quite so essential. The increased speed also reduces the number of wall cranes essential.

2nd. The rapidity and ease by which changes of speeds are obtained, requiring no change of gears as formerly, and consequently no loss of time in doing so with all the numerous levers, rods, clutches, and so on.

The introduction of the series wound motor and the resistances combined into crane work, having made a clean sweep of the above by giving a wide range of speeds and powers which leaves nothing to be desired, in fact the speed is capable of regulation from the maximum to a movement so slow that a pattern can be drawn at an almost imperceptible rate of lift. The foregoing also applies to the travel and cross-traverse movements, each of which can be controlled within one inch in a good crane.

3rd. Great simplicity in working, as the different motions can be all operated from the floor, if need be, where there is not sufficient work for an attendant.

Taking the foregoing into account it will be conceded that the modern three-motors electric crane, when driven by slow speed motors and fitted with proper resistances and controllers, &c., is the most efficient and economical hoisting machine constructed.

In putting down new plants, therefore, the modern electric travelling crane is almost certain to supersede all others.

Mr. Alfred Saxon said that to institute a comparison between the electric and the rope crane was like "whipping a dead horse." No doubt the electric crane had pretty nearly the full advantages that an enthusiast like Mr. Adamson claimed for it. At their own works, when they went into the question of installing an electric crane, they were led further and further on in that direction until they adopted electric driving throughout.

He knew a foundry where an old hand crane, and so far as he could gather, a square shaft crane, were replaced by an electric crane, supplied with power obtained from the Salford Corporation, and that crane, which was running overtime, and occasionally at week ends, was worked at a cost of 30/- a week for electricity, whilst the amount of work done was three or four times that done in the same time with the two old cranes, and instead of several attendants only one was required.

He agreed with Mr. Rea that next to an electric crane a well-designed rope crane was the best, but if electric power was at all readily available the electric crane was undoubtedly the proper thing to adopt.

Mr. Robert Matthews said the electric crane was the only one "on the market," but he did not think it was quite "civilized" yet. No doubt electricity was the best motive power for the crane. For intermittent work and variable speeds the electric crane possessed great advantages, but he did not quite agree with Mr. Adamson about the cost. The capitalisation account and the upkeep expenses were considerable, and the difficulties in connection with the controller or the switch had not been entirely overcome.

The rope crane had been a good and reliable "friend," slow but sure, and seldom failed. He did not remember a single accident in his own experience due to a rope crane, whereas they had had two or three dangerously near ones with the electric cranes; and on one occasion a boy was killed by an electric crane, but whether or not this was due to the electricity being carelessly or accidently switched on he could not say. It was his intention next winter after they had got their installation going to bring some figures before the Association as to the efficiency of electric cranes. He could only at present give them a few particulars which had been ascertained, but these

had been taken in an impartial manner, and the instruments for testing had been sworn to be accurate, so that they could rely on the results given, however as these will be given fully in the paper they need not be given here.

With regard to rope driving he thought there were no figures available on which they could rely, but he did not believe the driving of the rope was as extravagant as some would make out. They had rope cranes which had run night and day for twenty years, and little had been done to them in the way of repairs, and he found in one case it only took 5·64 HP to drive the whole of the ropes of a 30 ton crane, whilst one of another make took 7 HP. In one case the rope was heavier and ran slower, and in the other there was a small rope running at a higher speed.

Mr. Day said the discussion had confirmed the opinion he held as to the advantages of the three-motor electric crane. His views on the subject were practically the same as those expressed by Mr. Adamson.

The President (Mr. Henry Hodgson) said he dared say the electric crane was the best, but it had not arrived at perfection. There might be objections to the rope crane, but after all it had been a very good friend. He had a rope crane which had been at work eleven years, and had not cost more than two pounds in repairs. He thought, like Mr. Matthews, that the driving of the rope was not so serious a matter as people made out, and the power absorbed and wear and tear were not so great as was sometimes stated. There was more said against the rope crane than it deserved, and it had done so well for them that there was still room for it. They were, however, putting down an electric crane, which would be started on the following Monday, and he was looking forward with interest to the result.

As Mr. Adamson had suggested, there were a good many objections to the one-motor crane, in which they met with all the difficulties incidental to the electric crane, whilst they were not relieved of the difficulties, as regards gearing, that were experienced in the case of the rope-driven crane.

REPLY.

As Mr. Adamson was unable to be present at the meeting he subsequently sent the following remarks:—

Mr. Whitehead has been very fortunate in keeping a rope crane running for 10 years for less than £5 in repairs, and also the President in being able to work a crane 11 years for £2, because in looking over our own records we find that when we had rope cranes one of them used five ropes in under five years, and another one, that was not working so hard, used six ropes in under ten years. As the ropes cost *over £5 each*, this shows that the cost of repairs of a rope crane is likely to be more than these gentlemen state, and also that, like everything else, a great deal depends on the *amount of work done.*

It is not necessary to go to foreign builders for cranes with gears, or worms in oil baths, or ball bearings, or the various other matters that Mr. Whitehead noticed in the Paris Exhibition, they can be obtained in this country from first class makers.

Replying to Mr. Heap as to the waste of power when running slowly, I would repeat the statement made when opening the discussion, that the cost of power in an engineering shop is only a small percentage of the total cost of production, and that if you obtain the result you require you can afford the slight expenditure of power.

I cannot follow Mr. Rea's argument about the efficiency of a rope traveller being 50 % because the rope does take *some power*, depending (as I pointed out earlier in the evening) to a great

extent upon its capacity for doing work, and this loss of power is going on *continuously*, so that if the efficiency *is* 50 % (assuming Mr. Rea's figures to be correct) when lifting the full load it will be very much less when dealing with smaller loads, or when allowance is made for the time the motions are at a standstill (while adjusting chains, &c.) owing to the *constant loss due to the rope.*

Referring to Mr. Alfred Saxon's remarks as to the cost of power for working a crane, we have had figures given us of the cost of running one of our cranes that are much less than what he mentions.

I hope Mr. Matthews will keep his promise and give us his figures as to the efficiencies, and also further details of the tests of rope cranes that he mentions.

THE TESTING OF LATHES FOR ACCURACY.

READ SATURDAY, 23RD MARCH, 1901,

BY

Mr. W. C. WENK,

(ALTRINCHAM.)

The proof of the pudding is in the eating, and we might likewise say, that the accuracy of a lathe is determined by the quality of work turned out by it.

It is not my contention that good work cannot be "worked" out of a lathe that is known to be inaccurate, but that a higher class of work can be turned out cheaper from a lathe that is practically correct.

A physician makes his diagnosis from the symptoms which he discerns in his patient, and treats the diseased organs accordingly; we might apply the simile to a lathe, and correct the diseased or inaccurate parts, the symptoms of which are shown by the work produced by it.

To get a general idea of how a lathe should be tested in its many vital parts, we will take a lathe that is suffering from general debility and give it a thorough investigation; to do this, let us first of all supply ourselves with as few and inexpensive tools as possible, so that these tests may be applied in small works which have not the facilities to enter into a thorough and elaborate examination such as might be attempted in large and modernly equipped factories.

We shall need a proving or test-bar, as it is commonly called; this consists of a bar preferably of cast-steel about $1\frac{1}{8}$ inches in diameter, and from 12 to 15 inches long, and having a tapered shank to fit the spindle of the lathe to be tested; this bar should be hollowed out from the large end of the bar as far as the large

diameter of the tapered shank by a succession of decreasing sizes of drills, say from $\frac{7}{8}$ths down to $\frac{3}{8}$ths of an inch, as shown in sketch.

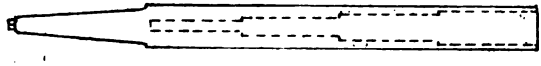

TEST BAR.

This is to prevent the bar from sagging at its extreme end which is left unsupported, and which is very apt to sag a thousandth or two, if this precaution is not taken. At factories where it is their good fortune to possess Universal Grinders, I would advise that this bar be ground, although by using a little care and skill, a very accurate bar can be produced on a lathe.

Two discs mounted on lathe centres will also be required; these discs can be made of cast-iron, and about 10 inches in diameter, about three-quarters of an inch thick; they must be turned the same size, and absolutely true on their diameters, and must be straight on the face for about one inch from the periphery, the remaining face of the disc can be recessed for clearance as in sketch.

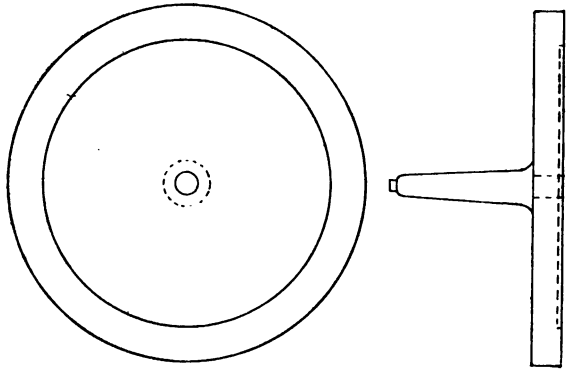

TWO DISCS.

A truth indicator is also needed, this useful instrument I have been led to understand, has not been used to any great extent by mechanics of Great Britain. It is an instrument that no tool room should be without. For the benefit of those who have never used or seen one of these time and labour-saving appliances, I will try to describe, with as few words as possible, how a cheap one can be made which will answer all the purposes of the more expensive ones which are to be bought.

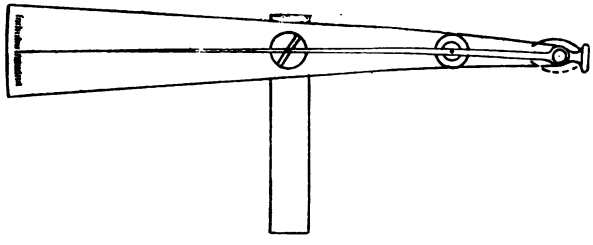

TRUTH INDICATOR.

The material which is required is a piece of three thirty-seconds sheet steel, eight inches long, the width tapering from one and one quarter inch down to about a quarter of an inch; on the centre line an eighth of an inch from the small end drill and tap an eighth of an inch hole; on the same line an inch and half further along, and another about the centre of the plate drill and countersink a quarter inch hole to fit a bevel head quarter of an inch screw; these holes are used to fasten the plate to an old lathe tool or any piece of stock about the same dimensions, that can be conveniently held in the toolholder. A pointer should be made of one-sixteenths sheet steel, as light as possible to sketch; when fastening the pointer to the plate a thin paper washer should be placed between them before the one-eighth screw is put in place. This is to reduce the friction of the pointer upon the face of the plate. To cause the pointer to have a continued pressure against the object to be tested, a small piece of spring, such as may be found in cheap watches, should be fastened to the plate in such

a manner that its pressure against the short end of the pointer will more than counterbalance the weight of the long end.

These tools with two nuts for testing the lead screw, in all probability, would have to be made, a micrometer and pocket straight edge complete the paraphernalia.

First, level up our lathe bed, for some lathes will bend and twist and accommodate themselves to an uneven floor, thus causing endless trouble.

Let us then examine the bearings on the spindle with a micrometer or a caliper square to see that it is perfectly round; many cases where inaccuracies were credited to poor centre holes, if investigated might be traced to a spindle that had been worn slightly elliptical.

The spindle should show a good bearing in the boxes to insure the best of conditions; this can be ascertained by smearing thin streaks of Prussian blue on the spindle bearing, and then turning the spindle in the boxes which should be tightened fairly snug. I recommend the use of Prussian blue, such as can be purchased in small tubes for the fitting of all small and particular work, because it can be laid on thinner and it contains no grit. This grit, which is so detrimental to all the bearings, is to be found in red lead, and more especially after it has laid a week or two on a fitter's bench. The centre recess should be concentric its entire length with the lathe bearings. To prove this, fasten the truth indicator in the tool-holder and apply the short end of the indicator pointer to the inside of the spindle and revolve it, if there is no inaccuracy the long end of the pointer will remain perfectly still. We can have recourse to a more severe test by placing the test-bar in the spindle and applying the indicator to the protruding end of the bar.

To test the dead spindle, remove the key which prevents it from revolving, then apply the test bar and indicator in manner

as we did with the live spindle. By turning the spindle with the advancing screw and hand wheel we get the same results.

To test the top of the lathe bed we remove the carriage and loosen the head-stock from the bed. In case of the flat type of lathe with no V bearings for the carriage and tail stock, the straightness of the top could be easily determined by applying a fair sized surface plate or a broad straight-edge. But as I am catering more for those who perhaps have neither of these sufficiently accurate for this purpose, I will try to limit myself to the few tools already mentioned, with which we will be able to test any kind of lathe.

Place the discs in their respective spindles and screw or clamp the indicator to the disc which is in the dead spindle so that the short end of the pointer rests on the top of the disc which is in the live spindle, in the intervening place between the head and tail stock, fit a block of wood; then move them together along the top of the bed. If there is any inaccuracy it will register on the indicator; a greater range is afforded by advancing the dead spindle and using various lengths of blocks. To prove the guide slot or V's, on or in which the tail stock is aligned, turn the disc in the dead spindle a quarter turn so that the small end of the pointer rests on the side of the disc which is in the live spindle, and move the head and tail stock together in the same manner as we did in the previous test.

To prove alignment of the two spindles with each other, the two discs still remaining in their respective spindles, and removing the indicator, we bring the head and tail stock near enough together so that the discs will just touch each other. They must then coincide on their periphery, which can be readily ascertained by the use of a straight-edge, preferably one with a knife edge. They should also touch all around on their faces and be able to hold fast four pieces bond or tissue-parer placed as at the four corners of a square. A test which is more reliable is, to separate the discs

so as to permit the application of a hardened steel cylindrical gauge at various points. I do not advocate the using of paper in making tests of any kind where a hardened and ground gauge can be applied. If paper must be utilised, bond-paper which is much harder than the ordinary kinds, and more uniform in thickness should be used.

To prove that the carriage ways are parallel with the spindle, fasten the indicator in the tool-holder and place the test-bar in the live spindle, then apply the indicator to the bar at its horizontal centre line and move the carriage back and forth; the indicator should also be applied at the top of the bar. Care should always be taken that there is not too much pressure on the test-bar, especially when the indicator is near the end of the bar; the test-bar should now be applied to the dead spindle, and by moving the tail-stock the entire length of the bed may be tested. The same test can be made by using a micrometer instead of the truth gauge, and by fastening the micrometer to the tool-slide so that the butt end may be used as a trammel against the test-bar; by its use inaccuracies can be read in thousandths of an inch.

To prove that the cross feed is square with the bed and spindles, fasten a straight parallel bar that is fully as long as the total travel of the cross-slide to one of the discs and place it in the live spindle, apply the truth gauge to the parallel and move the cross-slide back and forth.

The micrometer may also be applied in this test as in the previous test, and very good results may be obtained.

Testing the Lead-screw.—Should the lead-screw be badly worn, it would be advisable to lap the screw with a split nut until a uniform diameter and size of thread is attained; this can safely be attempted without any danger of changing the pitch of the screw. Although this is not necessary in the case where the screw has a V shaped thread, it is advisable; we must now make two nuts as shown in sketch, which should be a snug fit on the screw;

place the screw on a surface plate, planer bed, or on the lathe bed itself, if it will permit the convenient measuring. With the nuts say an inch apart, caliper over the outside of them on the centre line of the screw and turn the screw; should the investigator be unfortunate enough not to possess a vernier caliper or adjustable sliding micrometer, he can get just as accurate results with the use of a truth gauge, by attaching it to one of the nuts, and by clamping a rod to the other nut in the V slot shown in the sketch. To obtain the best results, the nuts should be separated at various distances whilst being tested.

To prove a lead-screw for uneven or drunken, or for very minute inaccuracies, a nut should be made like that of sketch No. 2, having only one point of bearing in the lead.

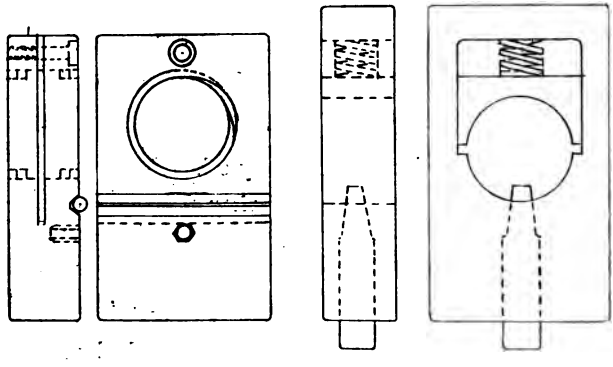

No. 1 NUTS. No. 2.

DISCUSSION.

Mr. J. Morris said the author had referred to the testing of the roundness of spindles. He would like to ask whether the author could tell them anything about testing the roundness of conical spindles. He was not advocating conical spindles for

lathes, but he would like to know if there were any ready methods of testing them.

Mr. ALFRED SAXON said the author had taken the case of an old worn-out lathe, but there were probably many new tools being made to-day that ought to be tested in the way he had suggested. He thought the prices obtained by tool makers would allow of them doing more than they did in the way of testing their tools, before sending them out of the works, in the various operations they might have to perform. In that way they might save the user the trouble that was often met with in adjusting them. There were several points with regard to which tool makers did not seem to take sufficient care to ensure accuracy. When ordering tools the buyer had largely to consider the reputation of the maker, and he thought that in the shops of makers with good reputations reasonable care was taken. Tool making had vastly improved in this country of recent years, and our tool makers were certainly getting into a position to compare with those of any other country, but there was still room for them to strive after a higher standard of accuracy than at the present time.

Mr. E. G. CONSTANTINE said there were certain rough and ready tests which he had applied to tools made by firms who did not possess reputations of the first class, and he had been surprised to find in some cases that they would not stand even these tests. One of the tests was to bring the tailstock up to the headstock and see if the centres met, and they did not always meet that requirement. Another test was to put the faceplate on and try it with the toolholder for the spindle of the headstock being perfectly in line, and they did not always stand that test. Of course it was best to buy tools from makers with a good reputation, who would not think of turning out a tool of

the description referred to, but there were occasions when they had to pick up a tool quickly, perhaps from a broker or merchant, and in such cases it was very necessary to test it in the way mentioned, even if they did not apply any more rigid tests.

Mr. C. W. Hunt said he believed manufacturers of American lathes and other machine tools were in the habit of testing every machine for accuracy before it left the works, such tests being recorded for future reference, and if any adjustments were needed they were then made; afterwards the tool received a number by which it could be traced, if necessary, to whatever destination it had been despatched.

The testing of tools in America, however, was not such a long operation as might be supposed, as the mechanic being generally more expert in the use of the micrometer and other delicate measuring instruments, left very little to be accomplished by way of adjustment when the testing came to be done.

Their system of machining the parts, the use of jigs and chucks, and the general standardising of machines, was one which lent itself to more accurate results than probably was the case here; besides which, as the Lodge and Shipley Company puts it in the forefront of their catalogue, viz.:—"We manufacture only lathes and their attachments and concentrate our entire energy upon them," had very much also to do with the accurate features which the best class of American lathes possess.

Lathes were now, he thought, being made more accurately than formerly in this country also; and more was heard now in workshops of the $\frac{1}{1000}$ths than the $\frac{1}{32}$nd or the $\frac{1}{64}$ths; still much remained to be done, and should rightly be done to make and keep our lathes—which were the "corner stone" of

engineering shops—up to a high pitch of accuracy, which after all was the most important feature for a lathe to possess.

The keen competition which prevailed in the machine tool trade, both home and foreign, was leading and compelling makers to manufacture a more accurate tool than formerly, which, although costing a little more, gave better and more satisfactory results, and enabled a higher standard of accuracy to be maintained all round; whilst the cheaper and lower class lathes were being cut out of the market.

Mr. J. Vose said a lathe or other tool tested when at rest might give a different result from a test made when working, and when the new technical school got going it might be desirable to co-operate with that institution in the testing of tools when at rest and at work, and other tests of that kind.

One thing which struck him about several American tools was conspicuous by its absence in many English ones, and that was the grinding of the centre holes of lathes, which were likely to get out of truth when a lathe spindle had been hardened.

If a maker had to turn out a machine guaranteed to meet certain rigorous tests of accuracy for some specific requirement, the cost would often be much greater than it would be under ordinary conditions, and what they wanted to get at was the allowable limits in the point of accuracy for average work, as compared with the requirements where rigid accuracy was specified.

One method of testing the alignment of headstocks was to place a testing bar of comparatively short length, accurately ground up, in the lathe centre hole of the headstock, and also one in the tailstock. If a hardened and ground female template would slide from one to the other without any perceptible jar, that would be a rather good test.

He would suggest that when the technical school got going there might be a few practical demonstrations of the various methods of testing, at the school, or they might be shown at some works where the members of the Association could actually see them.

Mr. Jas. Bolas asked a question as to the effect of a change of temperature on a tool which had been tested and found perfectly accurate.

Mr. W. Bunting asked how the author got his fast headstock square in the first instance. The method adopted by him to get the fast headstock square was after the spindle was turned, ground and bedded in its place in the headstock, was to push a collar on the small end of the spindle and have it ground to the same diameter as the spindle nose. The headstock was then placed on the bed, and a trial was made with a side block as to it being square. By trying on the collar and the spindle nose it could be seen if it was true with the side of the bed, or needs throwing. The same operation was used in trying on the top of the collar, and the spindle nose for getting it true with the top of the bed. The movable headstock was then adjusted and got square from the fast headstock.

He found this method more to be relied upon than trying with square and straight-edge across the bed, as so many little things step in which might cause an inaccuracy, such as the square getting out of truth by the workman's indifference both as to its use and proper care, or the interposition of a small burr, grit or lint from the waste that was in use.

A tool might be tested at the works and sent out as accurate, but afterwards when erected might turn out inaccurate owing to its having been put down out of the level by some incompetent person. For instance, at one place he received a

complaint about a lathe not sliding parallel, and on testing it he found it was $\frac{7}{8}$in. out of the level, and $\frac{3}{16}$in. twisted; a carpenter had put it down! When it was levelled up it became "true" again.

Mr. Hans Renold said various tools might be used to test lathes. He had no less than six truth indicators in his own works. There were fifteen lathes in the shop, of which only one was of English make, all the others being American. He started about 20 years ago with English lathes, including some of the very best Manchester lathes. Fifteen or sixteen years ago, however, he made his first visit to the States. He at that time knew very little about tools, but on visiting the works of some of the large lathe makers—he could mention four in particular—he was struck with the time and trouble they devoted to testing their lathes and the various appliances used for that purpose. He was induced by that fact to buy a few tools, owing to the confidence engendered by the trouble they took in testing, especially as in the few shops in this country he had been in he had not come across any such system of testing.

They had a lathe once from Brown & Sharp which turned out work that was anything but accurate. They wrote to the firm pointing out that the lathe was not accurate. The firm sent back a long report, in which it was stated that the lathe had been tested by such a man, who found the spindle so and so out, the bed a little on the twist, &c., everything being accurately set down according to the test made at the works, and it was added that if he saw that the machine shop floor was as level as it could be made, and the lathe bed was well levelled up, he (Mr. Renold) would obtain the same results. He did what was recommended, and found that the results subsequently obtained were practically the same as those indicated in the report of the Brown & Sharp Co. He did not mean to lump

all American manufacturers together. There were worse tools made in the States than anywhere else, but with respect to the firms whom he had in mind no one could visit their works and see the careful tests that were carried out without feeling more confidence in what they were doing than they would feel where such tests were not carried out.

Mr. Wm. Heap said he would like a little information as to the best method of fastening the centre bar of the loose headstock. In some cases a stud was used which formed a kind of wedge against the headstock. In other cases the casting was split and screwed up as a clip.

The first method he considered barbarous, the second distorts the mouth of the headstock, displacing the centre bar; both methods imply a slackness of fit which ought to be dealt with by a renewal. But as it is necessary to lock a centre bar in order to prevent it from working back, that locking should be done on the screw only, thus leaving the mouth of the headstock free from complications, perfectly solid and rigid.

Mr. W. Bunting said he had found the best way, both in large and small lathes, was to put a screw on the top and a pad on the inside, and screw it from the top, letting it rest on the bottom.

Mr. S. Brayshaw said the author had referred to testing by means of the micrometer, and he would like to know whether that could not be extended a good deal, whether, in fact, most of the tests could not be made with the aid of a micrometer. With regard to testing the tailstock, even if they had no special tool at all, if they bolted up the micrometer on to the carriage and used the butt end, simply screwing it up against the centre having the spindle in, and then run the spindle out, bringing it

so that the butt end of the micrometer would touch the same spot on the centre, they would then have tested the tailstock for alignment.

(Mr. WENK: But you have not tested the recess in the inside of the dead spindle.)

He was aware there was a fault in that respect, but they could do that also by the micrometer. He would then put the discs in, these being ground true. Starting with the first headstock they put the disc in, and had the micrometer fastened on the carriage, and using the butt end, tested the disc; then they turned it half way round and tested the disc again.

(Mr. WENK: But how do you get the vertical measurement?)

They did that by putting it on the bottom and turning it round.

(Mr. WENK: How do you lower and raise it to get the vertical line of the spindle?)

They tested the bottom independently of the sideways test. To ascertain if the thing was correct in the vertical plane, they tested by having it at the side. The horizontal plane was tested by having it at the bottom. These were two independent operations.

(Mr. WENK: I have used the micrometer, but have found that the best results were given by the indicator.)

After testing the tailstock for alignment with the micrometer they could put a cylindrical bar between the centres; put the micrometer in the carriage, horizontally first of all, and then try it at one end and the other. They had then a very fair test of the ways in which the carriage ran.

Mr. COOK said he thanked the author for the hints given on the testing of lathes, many of which were new to him. With regard to the points raised in the discussion, perhaps they would excuse him saying they had rambled away from the

subject of the paper to the question whether English tools are as good as American.

Personally, as a buyer, he was of opinion that English tools were better than any in the world for durability, being made from harder iron, they kept in truth much longer and produce better work. English tool makers were at fault in not paying more attention to the artistic side of their machines, so as to make them more pleasing and catching to the eye; they were also allowing themselves to be talked out of their business by the foreign press, and also by journalists in England who knew nothing whatever about the practical part of a tool.

If a buyer will pay the same prices for the tools to the English maker that he pays to the foreigner he can have machines which, speaking from experience, will stand heavier cuts, produce more and better work, and require much less repair.

There are machines working in Manchester at the present time made by firms with which some of the gentlemen present are connected, which have been working almost night and day for the last 30 years, and are still producing excellent work.

Mr. Morris also thought that the question of the relative merits of English and American makers had been given too great a prominence in their discussions. The tendency of their discussions of late was to assist the American to cry his tools, and to talk the English machine tool maker out of the market.

Mr. Wenk, in replying on the discussion, said with regard to Mr. Morris's question he used the micrometer to measure the roundness of the conical spindle. He used different sizes of bushings so that he could get different distances from the collar. He then applied the micrometer so that the two bars of it rested on the bushing. This caused the micrometer to stand vertical

with the spindle to be measured. Mr. Bunting had asked how he got the headstock square with the bed in the first place. He had shown in the paper the way in which he tested it. He had not gone into the construction of the headstock, or described how he bored the headstock. He put one of the discs in the headstock and one in the tailstock, and they should stand perfectly parallel and in line with each other. If the two spindles were in line with each other they were parallel with the lathe. Therefore they were square with the side of the lathe. To find whether the ways of the carriage were parallel with the live and dead spindles, they placed the proving bar in the live spindle, and also used the truth indicator, or they could use the back end of the micrometer. As to the effect of a change of temperature on a lathe after it had been tested for accuracy it was difficult to speak definitely, but it ought not to be very great in the case of a lathe strongly-built and of good design.

The Chairman (Mr. Henry Hodgson) observed that in ordinary work it was not always necessary to have absolute accuracy in the tools. One well-known Lancashire firm of textile machinists had got the credit of making good machines by giving a certain amount of allowance in the bearings. They did not always want a "dead fit." A certain allowance was required in all bearings, and in other things also a certain amount of play was desired. There was, however, no doubt that the better a lathe was built the easier it was to get accurate work out of it.

He had pleasure in moving a vote of thanks to Mr. Wenk for his paper, which would no doubt cause them to take a greater interest in the question than perhaps some of them had previously done.

The vote of thanks was carried with acclamation.

THE LABORATORY AS A HELP TO THE PRACTISING ENGINEER.

READ SATURDAY, 23RD FEBRUARY, 1901,

BY

JOHN T. NICOLSON, D.Sc., M.Inst.C.E.

(MANCHESTER.)

It is now generally admitted that the laboratory is an indispensable adjunct to the engineering college; or that, in other words, experimental study is necessary for the proper training of the complete engineer.

The usefulness of the laboratory to the engineer in actual practice, on the other hand, is not so generally recognised; or, if tacitly admitted by many, the belief is but seldom acted upon in daily professional life.

Yet it is certain that, if they are not to degenerate into mere copyists and salesmen, British engineers must take up the question of applying experimental research in connection with their daily work, so as to be able to improve upon what has been designed by others, and to discover fresh fields of operation for themselves.

Although until recently the art of engineering has prospered very well in this country without any direct obligations to research laboratories, it is far from being the case that it has arrived at its present condition without experimentation. On the contrary, we all make use every day, without considering their origin, of the results of the researches of the pioneers of the profession; whose work, the wonder of their age for boldness and novelty, was for the most part based upon most careful preliminary experiments.

A vast body of information has thus been accumulated; which, although sometimes of questionable accuracy, yet supplies the fundamental data of all ordinary engineering work; and is taken for granted as part of our common stock of knowledge.

But the task of the engineer of to-day differs greatly from that of his predecessors. As the processes of manufacture have become perfected, as the materials of engineering have increased in number and complexity of properties, as the emulation in excellence and efficiency has become more severe; so the roughly approximate theories which were sufficient for the days when competition hardly existed, and almost every kind of engineering work was of a lucrative character, have ceased to be adequate; and the methods and instruments of testing have been endowed with a greater delicacy and precision.

In every kind of industry which consumes power the necessity for reducing the cost of production has invested the question of the useful effect of motors and machines with an exceptional importance, and the time seems to be approaching when no steam engine or other prime mover will be installed without a guarantee of its efficiency, to be determined by trial; and when a closer approximation to the absolutely most economical forms will be assumed by all the elements and parts of machines under the influence of a more searching experimental study of their strength, stiffness, accuracy, and economy of operation and production.

In order, therefore, to be in keeping with the progress of engineering science and art, and to meet the exigencies of industrial competition, it seems evident that mechanical laboratories containing motors and machinery on a commercial scale, specially designed and fitted for experimental research on all questions of engineering design and detail, are a necessity of the future.

The laboratories attached to engineering schools in this country have hitherto been restricted to one or other of the following objects :—(*a*) The teaching of applied mechanics by experimental apparatus of a similar character to that found in a physical laboratory. (*b*) The determination of a few of the properties of the materials of construction. (*c*) The instruction of students in the common modes of testing prime movers; and (*d*) generally, to the very desirable object of showing to young engineers the limitations imposed by practice upon the theoretical treatment of their subjects in the lecture room.

The writer is of opinion that the scope of the laboratories of the great engineering colleges of the future must be extended so as to include, not only all the above, but also to provide facilities for experimental work by the actual leaders of industry—or their appointed deputies—on the problems of engineering design which present themselves in their daily practice.

It should be the endeavour in such a laboratory to ascertain and set up a standard of reference to which the specimens of every type and class of machine or instrument may be referred and relatively to which their excellence, or *figure of merit*, may be impartially determined.

This ground is only to a very slight extent covered in this country at the present time. We have, for example, the great engine and boiler insurance companies, whose *personnel* make efficiency and other trials of steam boilers and engines; and in whose rudimentary laboratories such experiments as the calorific value of the various fuels are carried out. Again, iron and steel makers usually employ machines for testing the properties of their materials in the study of their variation with that of the chemical composition which they also determine. Many manufacturing engineers have testing stations at their works for making isolated trials of their engines or other products, which

cost them thousands of pounds per annum. But progressive series of trials such as those carried out by the late Mr. Willans are very exceptional.

It is obvious, if only from these examples, that laboratories under one form or another have become useful adjuncts to industrial success; but the proposition which the writer sets before himself for establishment in this paper is that the laboratory, *when properly equipped and made use of*, may become a really important factor in industrial competition; the condition necessary for successful work being the co-operation of the leaders of our manufacturing industries, who must realise their intrinsic utilitarian value, and the high national significance they are assuming abroad.

All engineering research may be classified under the following divisions:—

(A) Investigations of the properties of the materials of engineering, and studies of the best proportions of the elementary parts of machines.

(B) Experimental study of the processes and modes of operation employed in the various handicrafts.

(C) Investigations as to the convenience and economy of the various modes of obtaining mechanical work from the stores of energy available in nature.

(D) Inquiries into the convenience and economy of the various methods of transmitting this mechanical power to the points where it is required.

(E) Researches on the adaptability and earning power of the machines by which the power is finally absorbed in doing useful work.

Under Section (A) comes the study of the mechanical properties of the materials which render them useful in construction; such as their strength and elasticity, their hardness, their

brittleness and toughness. The properties also which they possess in regard to the ease, or otherwise with which they can be worked or formed into the parts of machines; as, *e.g.*, the facility with which they can be filed, chipped or machined; forged, rolled, hammered, drawn, drop-forged, melted and poured or cast; welded, brazed or soldered; hardened and tempered.

Among the many subjects, in this connection, upon which the last word does not appear to have been spoken, are those of the proper or best forms of machine details, such as bolts, nuts, keys, cotters, single and double-eyes, flange and other couplings, pipe joints, boiler stays and riveted joints.

It appears to the writer that the subjection of such elementary parts to loads within their elastic limits, (so as not to render them unfit for service), accompanied by delicate measurements of the deformations of their various members, forms a legitimate object of laboratory research worthy of every encouragement.

The assumption that because these humble machine elements so long familiar to all of us fulfil their purposes without further trouble or sign of distress, they are therefore incapable of any improvement is not entirely warranted.

To take only one example; that viz: of the riveted joint. It is now contended, as the results of experiments made mainly on the Continent, that the common method of designing such joints—as depending on the shearing resistance of the rivet—is incorrect and does not give the best possible proportions.

From these experiments it appears that the rivet is, when under its working load, hardly ever subjected to shearing stress; but that on the contrary the joint is maintained rigid and staunch entirely by the frictional resistance to slipping induced between the surfaces of the plates by the tension in the rivets due to their contraction when cooling.

It was even found, contrary to anticipation, that joints in which the rivets were intentionally left smaller than the holes

in the plates gave better results as regards resisting slip and permanent set, when subjected to normal working loads, than those in which the rivets fitted tightly!

Such apparently anomalous results as these require either to be confirmed or disproved. Whether further experiments on this question will lead to any serious alterations of the proportions usually adopted for riveted joints, or whether it may be safely said that the matter is one rather of scientific interest than of practical importance, it is certain that it would be a satisfaction to know the true cause of such seemingly paradoxical behaviour.

Section (B) is, perhaps, more closely allied to the first section than to any of the others, as it concerns itself with the nature of the various crafts employed by engineers' workmen in taking advantage of the properties of materials just mentioned, or in overcoming the difficulties incident to the use of materials which do not easily lend themselves to being worked or formed into parts of machines, but which serve their purpose admirably when they have been so formed. Such materials may be said to have excellent *mechanical* but inferior *technological* qualities. Under this head we examine the processes of the smith, the woodworker, the fitter, the moulder, and all the other engineering handicraftsmen as to their real physical characters.

These sections, or either of them, might of course easily occupy the whole of the time at my disposal, and I believe that the close examination of many of these processes by laboratory methods would be most beneficial to all concerned, but to-night I would prefer to direct your attention more especially to some portions of the three last sections into which we have divided engineering research.

Under Section (C) we have first in importance the experimental study of the steam engine. In olden times, man was

the moving agent; it was by his unaided muscular efforts that matter was set in motion for the production of wealth. Labouring humanity is now, however, rapidly becoming the intelligent supervisor of the moving force instead of being the moving agent himself. Statistics say that for the work produced by every single labouring man, there is at present more than five hundred times the amount produced by the steam engine, so that all economic activity is governed by this agent, and by the supply of coal which forms its source of energy. The enormous influence of such an agency is obvious, and the importance of the regulation of its vast and remorseless power is clearer, if we bear in mind that 80% of all the mechanical power in the world has arisen within the last 30 or 40 years. The supremacy of the steam engine shows also no present signs of decadence; for so long as coal remains as abundant and, therefore, as cheap as it now is (or, at least, ought to be), all other natural sources of power must occupy only a secondary place. Our cataracts, our oil wells and our tides must wait for their more extended utilization until the enormous stores of mechanical energy accumulated in the coal fields of the world have been more or less exhausted.

From this point of view it is an amazing fact, when one thinks of it, that the very best steam engines waste 85% of the coal they feed upon; notwithstanding the unceasing efforts spent by our predecessors and ourselves for more than 130 years in the endeavour to improve them. It is well known to you all that by the laws of thermodynamics it can be proved that no amount of human ingenuity will ever make a steam engine to waste less than about 40% of the fuel it burns; the physical conditions of this planet have this for their necessary consequence; but there is a large margin available for improvement between these two limits, and our efforts must be unceasingly directed to reducing this margin; and to husbanding

the natural sources of energy left to us which have been and are still being so wastefully employed. The broad principles which govern the direction of the improvement of the steam engine are fairly well understood; as is shown by the general adoption of higher steam pressures, and the reversion to the use of superheating which is now taking place; but the writer takes leave to remark that a more particular experimental study of the behaviour of the steam in the engine cylinder will show that a hitherto unsuspected source of loss plays a more important part than has commonly been supposed. He refers to the leakage which takes place, past the admission and exhaust valves, of steam which either never enters the cylinder at all, or if it does so, passes through without doing any work. Since the years 1895-96, when certain experiments on cylinder condensation were carried out by Professor H. L. Callendar and the writer, at Mc.Gill University, Montreal, a new method of determining the leakage of valves has been instituted, which appears capable of giving results more closely approximating to those actually occuring than those formerly employed, if, indeed any method can be said to have been employed at all. The results of many such experiments made upon engines of from 50 to 3,500 HP, have shown that the loss so occasioned may amount to the equivalent of as much as one whole pound of coal per indicated horse-power per hour; and that the usual loss attributable to this source is probably seldom less than 10% of the whole consumption.

If this defect could be remedied, a notable step would be taken towards the elimination of the above mentioned difference between the efficiency now ordinarily attained and that which is theoretically possible.

The systematic study of the phenomena and laws of this leakage, and consequently of the means to be adopted for its cure, can scarcely be carried out in the workshops of the manu-

facturing engineer. And it is here that the writer thinks the laboratory may be able to play a not unimportant part. It is his good fortune to be associated in this City with an enlightened body of men, called the Technical Instruction Committee, and they have shown the confidence in him which was necessary to enable an experimental steam engine to be built for the express purpose of studying the question of the amount and character of the leakage of steam in the case of valves of various types.

This engine, which is now under construction by Messrs. James Carmichael & Co., Dundee, is of the horizontal compound side by side type, having cylinders 11½in. and 20in. diameter, with 3ft. stroke. The engine is provided with two cylinders of each size, either of which may be used as desired. One of the 20in. cylinders has slide valves with Meyer expansion plates, and the other has Corliss valves and gear. Of the two 11½in. cylinders, one is being made by Gebrüder Sulzer and fitted with their design of drop valves, and the other has Corliss valves and gear of the same type as for the 20in. Corliss cylinder. Thus a comparative study may be made of the efficiency of different types of valves, *e.g.*, Sulzer versus Corliss or Corliss versus slide-valves, and of the effect of size-variation by experiments on the 11½in. and 20in. Corliss cylinders.

The pressure may be anything up to 250lbs. per square inch, and the speed up to 110 revolutions per minute. Each end of each cylinder has separate exhaust pipes, so that the amount of steam taken by these respectively can be found by measurement after condensation in separate surface condensers.

The ends, sides and pistons of the cylinders are steam jacketed. The steam, when supplied to any of the cylinders, may alternatively go directly into the steam chests, or may be passed through the jackets before entering them. In the latter case it may or may not pass through a water separator. Steam

may alternatively be supplied to the jackets directly from the main steam pipe. The total horse-power indicated may reach 350.

The special feature of the engine, as already indicated, is its adaptation for testing the rate of leakage of steam past the admission and exhaust valves. For this purpose in the Corliss cylinder, each valve casing is a separate casting bolted to the cylinder with an intermediate thin plate, (*a* Fig. 1) which may either have an opening through it corresponding to the port area, or may be blank so as to shut off the cylinder from the steam chest. Thus, when the valves are operated (from the other engine by the crank shaft) under steam pressure, the amount of steam which leaks past the valve when it is closed can be measured by attaching vessels *b* for catching the leaking steam to the valve casing, and connecting them to the space *c* between the valve and the blank plate, with the interposition in the connection of a long plug valve *d* operated by levers *e* from the Corliss valve spindle itself *f*. By preliminarily admitting steam to the vessels *b* and then throttling or opening their exhaust pipes *g*, the conditions of pressure on the two sides of the main valve may be made to approximate to those occurring during actual running, and indicator cards may be taken from the vessels to show the rate of variation of pressure in them, due to leakage, while the valves are in motion. Allowance can also be made for the condensation taking place in the vessels, by taking the temperature of their walls and finding the condensation area from this and the cards.

In the case of the slide-valve cylinder, a thin plate (*a* Fig. 2) is also interposed between the back of the valve-chest face and the cylinder port facings, so that the same experiment can be made with this as with the admission valves of the Corliss cylinders. Recesses have been provided in the back of the valve-chest face *b* in which coils of small piping *c* are placed, so that

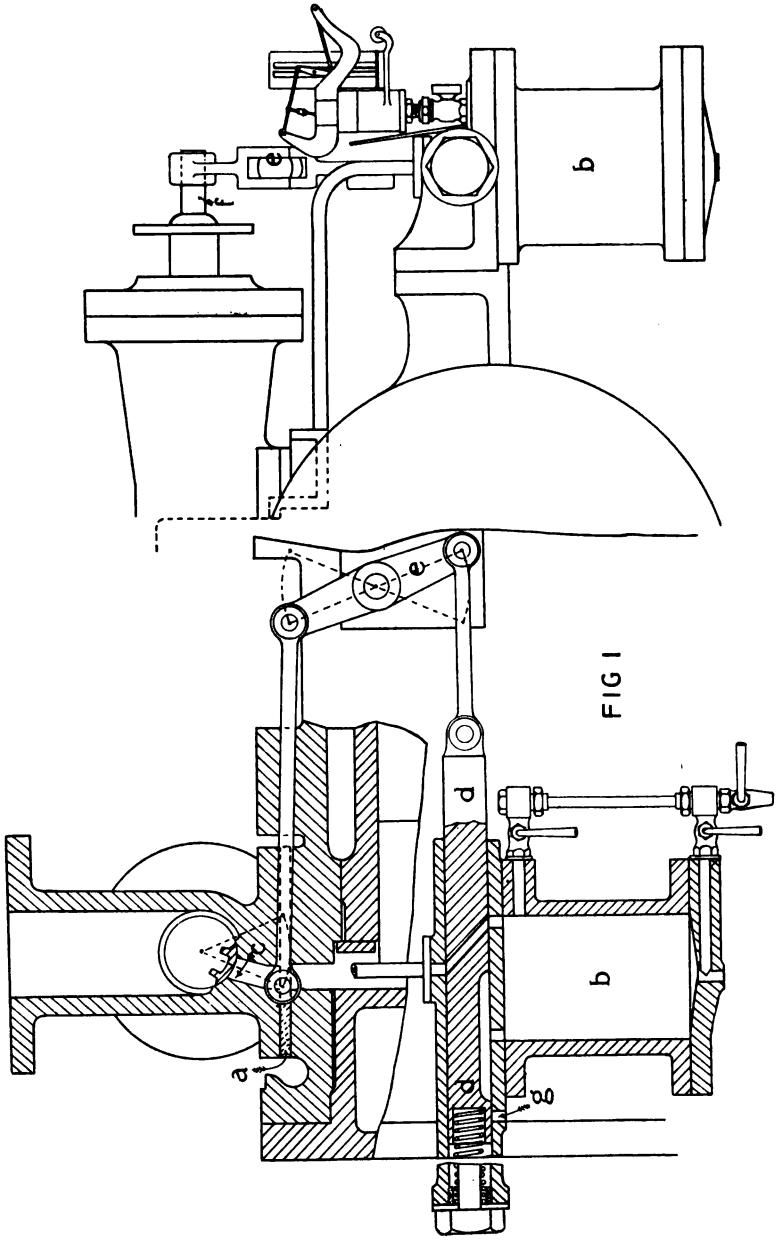

FIG I

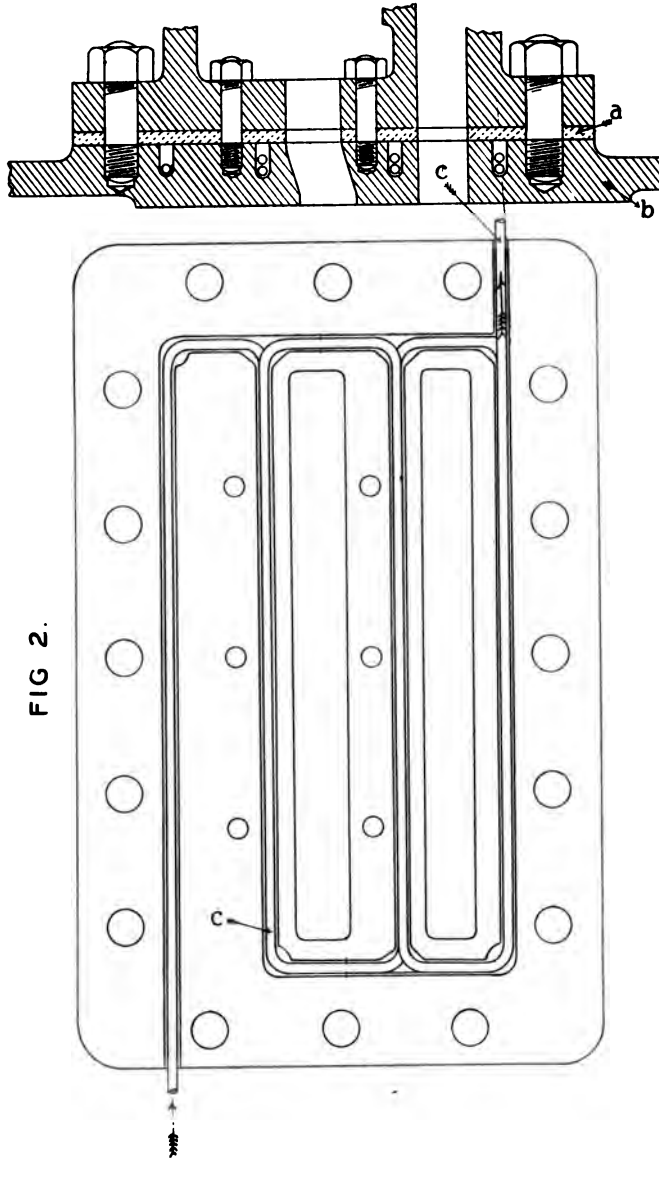

FIG 2.

when desired the valve faces may be heated by circulating steam, or cooled by circulating cold water therein. By this means and by the insertion of thermometers within its substance the valve face may be brought to the same state as to temperature as when working normally.

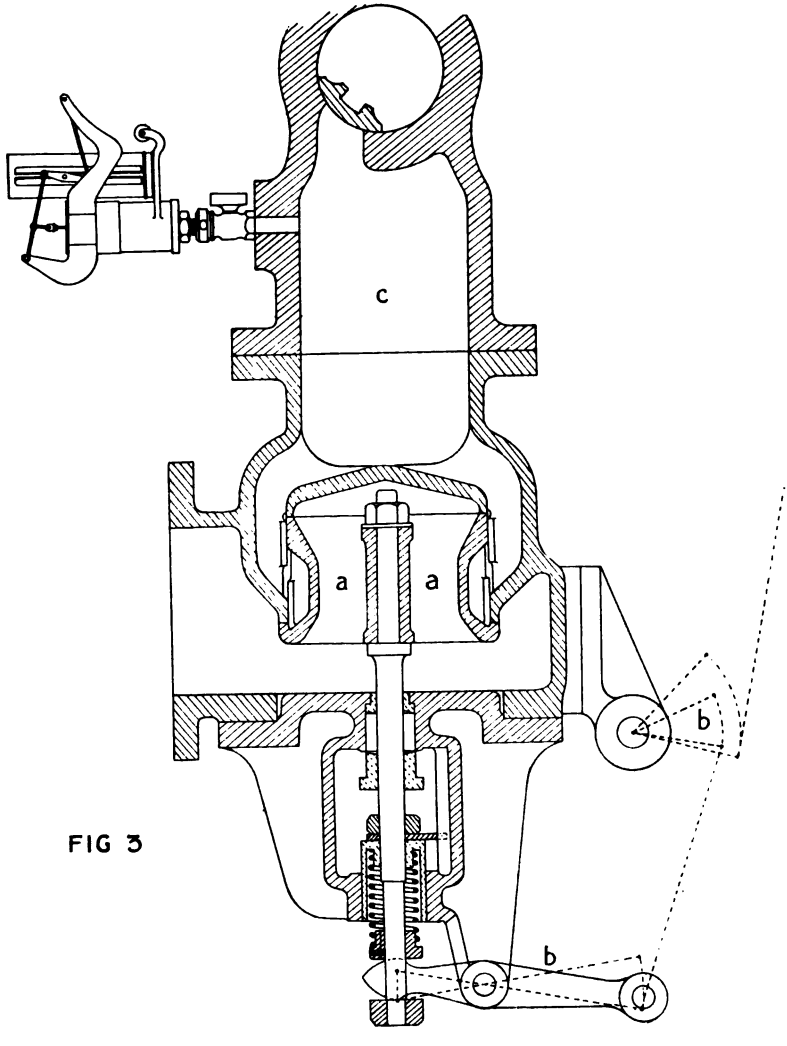

FIG 3

In the case of the Sulzer cylinder the leak may be studied by cutting off a portion of the cylinder close to each end, from which cards may be taken when the valves are being operated under pressure.

In all the four cylinders duplicate exhaust valves of the drop pattern are fitted at each end. (Fig. 3.) These auxiliary valves *a* are driven by special gear *b* from the valve motion, and are arranged to open and close simultaneously with the main exhaust valves, whether of the Corliss, Slide-valve or Sulzer pattern. By then taking indicator cards from the spaces *c* between the main and auxiliary exhaust valves (and by determining the rate of leakage past the auxiliary valves by special experiments), the leakage past the main valves during actual work can be inferred.

The steam boiler is one of the every day objects of engineering which has had a surprisingly small amount of properly organised and directed experimental research bestowed upon it. The efficiency of the boiler, which has been the object of nearly all the numberless trials hitherto made, means the proportion which the heat it extracts from the fuel bear to the total calorific value of that fuel. But I would venture to draw your attention to another view of the question and would suggest that a wider meaning should be read into the word *economy* when applied to a boiler than that which has merely reference to the question of the saving of coal. It is perfectly obvious when stated, that that boiler is the best in any case which gives the most steam at the least *total* expense; and from this point it seems that we ought to state the matter thus:—

ECONOMY OF STEAM PRODUCTION.

There must first be made against the steam generating plant the fixed charges of the installation, viz:—

(1) Interest and depreciation on first cost of boiler.

(2) Interest and depreciation on first cost of boiler-house and setting and chimney.

Then there come the running expenses and the cost of maintenance, which may be itemised as follows:—

(3) Cost of fuel used to produce the steam evaporated.
(4) Cost of repairs.
(5) Cost of fireman's wages.
(6) Cost of hot gases wasted to create natural draft.
(7) Cost of power or steam for forced draft (if any).
(8) Cost of the proportion of the administration expenses chargeable to the boiler.
(9) Insurance and other taxes.

After summing up all these items, if we divide by the weight of steam (or better still by the number of heat units contained in that steam) generated during the time for which they are reckoned, we shall obtain the *actual cost* to the boiler user of the steam which his plant has generated.

Looked at from this point of view the usual evaporation tests by no means cover the whole ground.

It may even happen in certain instances that a boiler which is *comparatively wasteful* in fuel may be the more economical in the end. Engineering colleges are a case in point. Many of these have a working session of little more than half the year, and for them *under-powered boilers*, of small first cost, which can when necessary be forced up to a rate of evaporation higher than that corresponding to the greatest efficiency, are the most truly economical. They give the most steam per pound sterling invested and expended by their owners.

This may be illustrated by reference to Fig. 4. In this figure the curve *a a* shows the running expenses incurred in the production of 200 HP of steam in boilers of varying sizes. As the size of a boiler for the given power increases the water to be evaporated per square foot of heating surface diminishes, and the evaporative efficiency increases; so that the working cost

for fuel, wages, &c., may vary from £40 to £90 per annum, as the rate of evaporation increases from one to ten pounds per square foot of heating surface. On the other hand the fixed charges due to interest, depreciation, &c., diminish with the size of the boiler, as is shown by curve *b b*. The total cost of the 200 HP developed during 500 hours in the year is given by summing curves *a a* and *b b*, as shown by curve *c c*. As the power is developed during a greater and greater proportion of the total annual working time, the effect of the fixed charge

FIG. 4.

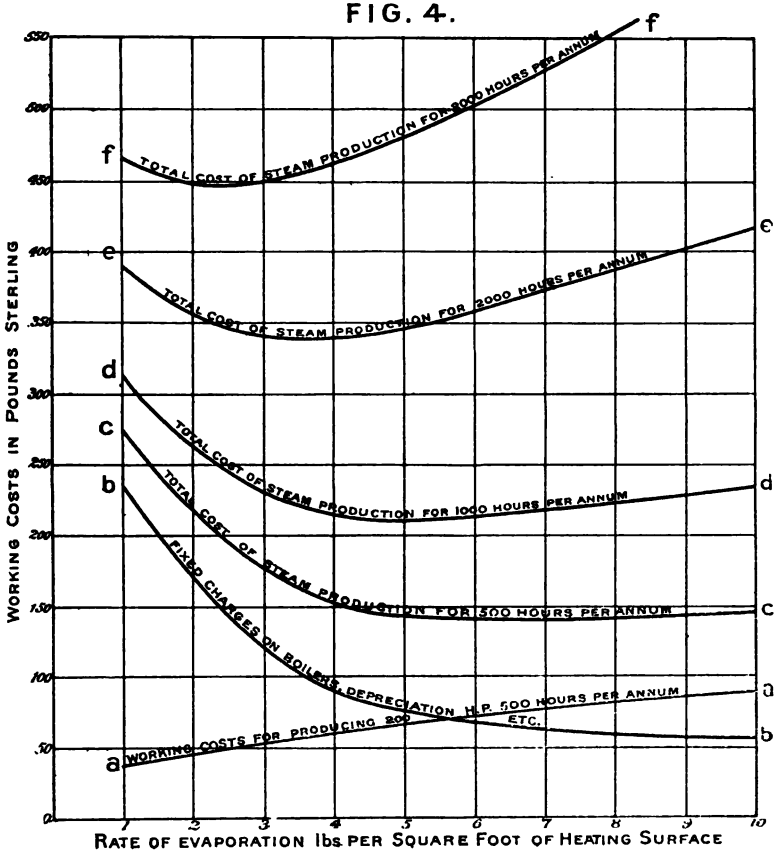

curve *b b* becomes less and less marked; and the curves *d d*, *e e*, and *f f* show the total cost of 200 HP of steam when developed during 1,000, 2,000 and 3,000 hours per annum respectively. Comparing the four curves, *c*, *d*, *e* and *f*, we see that large boilers with natural draught are cheaper when the number ef working hours per annum is large, and that small forced draught boilers are more economical when the boiler stands idle a large proportion of its time.

The experiments to be undertaken for the proper study of this problem, in its entirety, must include not merely the evaporative efficiency of given arrangements of furnace and heating surfaces, with the determination of the chimney—radiation—and other losses, but must also indicate the direction in which we must look for a diminution of the area of those surfaces, with the corresponding decrease in the size, weight and first cost of the boiler which accompanies it. Different kinds of heating surface, *e.g.*, furnace, combustion chamber and tube surface, cost very different amounts to manufacture, and the endeavour must obviously be made, by increasing the heat transmitting quality of the cheaper, to diminish the necessary area of the more expensive kind of surface. Careful account must at the same time be kept lest such decrease in first cost be over-balanced by a relatively too great increase in expenditure for renewals and repairs.

The most hopeful means to be adopted for the accomplishment of this end seems to be in augmenting the speed of circulation of the water on the one side of the heating surface, and of increasing the frictional resistance to the flow of the hot gases on the other. If the circulation is sluggish, a badly conducting film of water adheres to the outer tube of firebox surface and may permit of a difference of temperature of many degrees existing between that surface and the main body of the water. On the other hand, if the hot gases do not scrub

sufficiently against the inner heating surface, that surface may remain at a temperature hundreds of degrees lower than these gases, with a cold film of intensely non-conducting gas adhering to it, and retarding the passage of the heat to a much greater extent than almost any possible thickness of iron or copper wall (see Fig. 5). These observations lead to the conclusion that if it were possible to have a very much more rapid circulation of both the water and the hot gases over our heating surfaces their area might be much reduced; and a much cheaper and hardly less efficient boiler might be produced.

The physical actions just alluded to have been known to scientific men for some time, and were indeed especially pointed out by Professor Osborne Reynolds, in a paper read by him before the Literary and Philosophical Society of this City, so long ago as 1874.

Between the announcement of such far reaching physical discoveries, and their application by engineers in practice, there is often, however, and especially in this country, a great gulf fixed.

The bridge by which this gulf is in future to be spanned is plainly the laboratory of the Engineering College or Technical School; and the sooner our practising engineers apply a portion of their time and energy to specifically experimental work for the close investigation of the physical phenomena which accompany or form the object of their daily operations, the more rapid will be our technical advancement, and the greater our national prosperity, which latter is in so large a measure dependent upon and bound up with that of the engineering industries.

These remarks in reference to steam boilers apply, almost word for word, to such similar mechanical engineering structures as surface condensers, feedheaters, superheaters, intermediate receivers, jackets either for heating or cooling, the evaporators and condensers of refrigerating machines; and, in short, to all

the innumerable instances in engineering and the other arts where heat is required to be transmitted from one fluid to another across a metal wall.

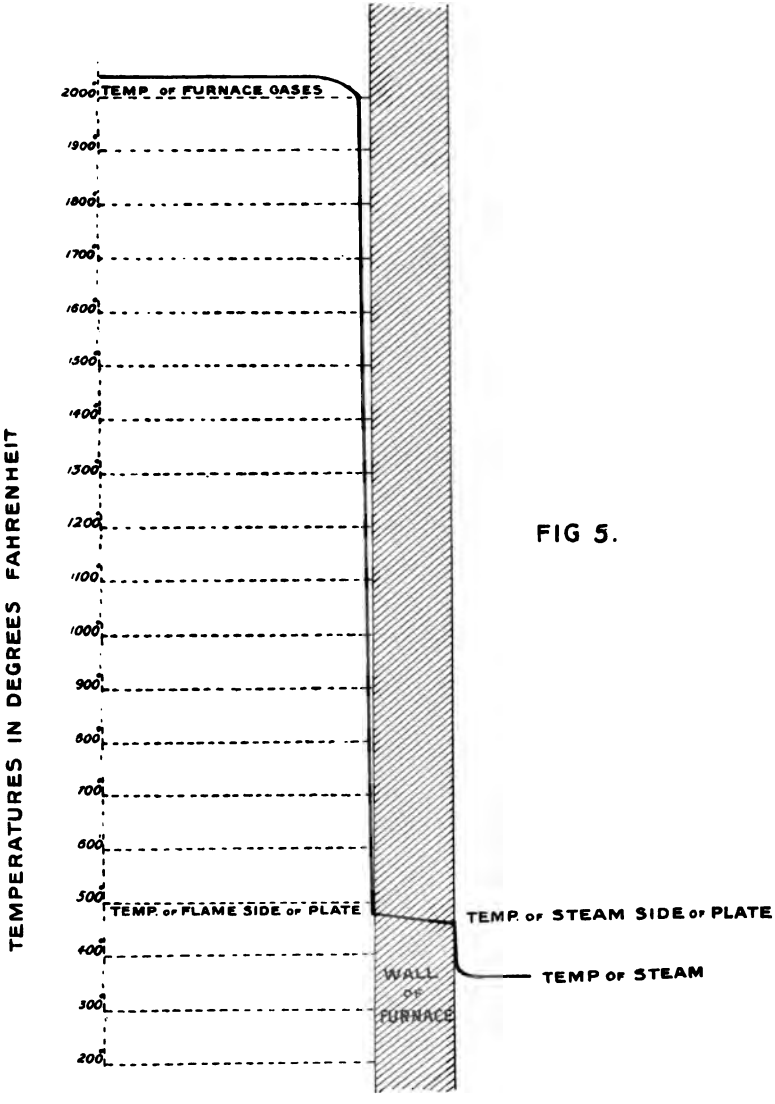

FIG 5.

The small surface condenser shown on Fig. 6 gives an example of the application of the above principles to the securing of a high rate of condensation of steam per square foot of surface of wall. The steam enters at *a*, passes both inside and outside of the double tubes *b* and *c*, and leaves at *o*. The circulating water entering at *d* and leaving at *e*, rushes through the narrow annular space between *b* and *c*, and as the inside of *b* and the outside of *c* are roughened, the wall temperatures next the circulating water are very low, and the heat transmission very great. This condenser effected the condensation of steam of atmospheric pressure at the rate of 118 lbs. per square foot of cooling surface per hour, equivalent to the transmission of about 100,000 thermal units (B T U) per square foot per hour.

In the case of the other kinds of heat-engines which come under our section (C), such as those of the internal combustion type operating with gas or oil, whether on the explosive or the slow burning principle; the time seems to be at hand, owing to the great advances which have recently been made by Callendar in sensitive and accurate high temperature thermometry, for a closer examination of the phenomena occuring within the cylinders of such engines. It is now possible to obtain the temperature of the exploding or burning gases at every point of the revolution with a close approximation to the truth; and if this be undertaken in conjunction with a study by means of thermo-electric couples in the metal of the cyclical variation of temperature of the cylinder walls and consequently of the nature of the exchange of heat taking place between the working fluid and its envelope; a great step will have been made towards estimating the true bearings of the various factors which influence the economy of such engines. We may thus study in the very engine itself the effects of varying proportions of fuel to air, of differing degrees of compression, and the

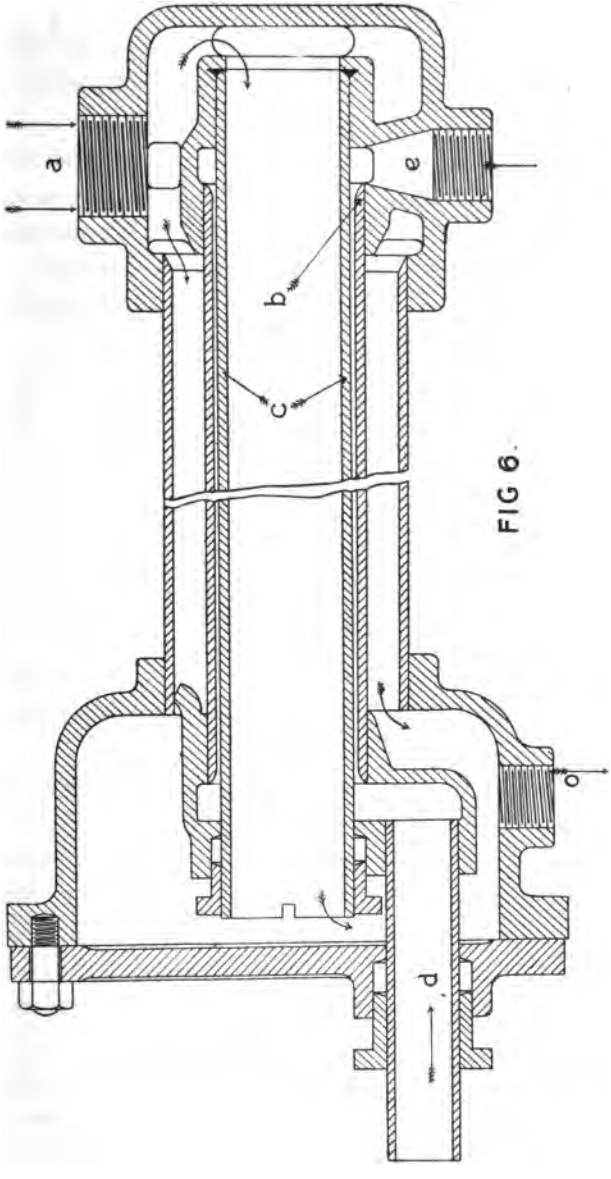

FIG 6.

mysterious phenomena of ignition, whether of gas or of oil fed in bulk or in the form of vapour or spray.

The investigation of the new Diesel motor—about which our President, Mr. Henry Hodgson, will I hope, soon have something more to tell us—on these lines and with such apparatus as that indicated in Fig. 7, must certainly prove most instructive; and as we expect to have one of these motors in the laboratories of the Manchester Technical School, it may possibly be our good fortune to make an attack on this new field.

In the matter of other prime-movers such as turbines, Pelton wheels and pressure-water engines, much yet remains to be done, if only in the perfecting of their practical details. A splendid opportunity for research in this field will offer itself in the great hydraulic laboratory, of which the Technical Instruction Committee have authorised the provision in the new school.

Along with much other experimental machinery and apparatus in this department means will be afforded for observing and measuring the flow of water through pipes, cocks, valves and the like; as affected by their design, construction and the manner of their attachment and use, under pressure differences up to 300lbs. per square inch.

Time, and the fear of wearying you, however, forbid a fuller reference to these matters for the present.

Under section (D) of our classification of the objects of experimental research was included the economy and efficiency of the machinery of transmission, such as shafting, belting, spur and bevel gearing, cotton and wire-rope gearing, as also the conveyance of power by hydraulic, pneumatic and electric conductors.

The determination of the relative merits of these systems for transmitting or distributing power is, in its entirety, one of the problems that perhaps lends itself least to determination in the

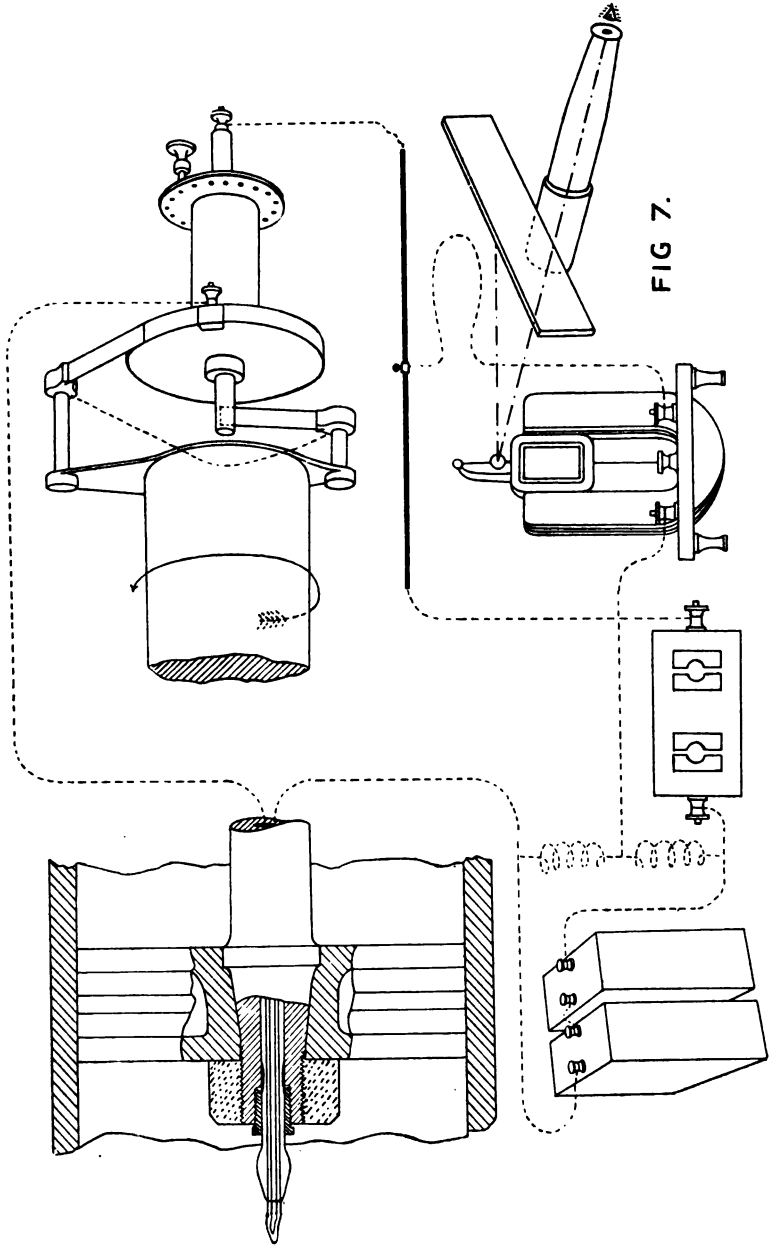

FIG 7.

laboratory. And this, in the writer's opinion, for two reasons: Firstly, the selection of the proper system for any given case depends so much on fortuitous circumstances which are not amenable to scientific treatment; and Secondly, the cost of maintenance and repairs is so extremely important an item, and so difficult to pronounce upon by means of laboratory experiments, that it seems as if the larger question of relative economy of the systems must be left for settlement in the workshops by those who have the opportunity of observing and comparing two or more of them in competition, and who are willing to undertake the labour of making the necessary measurements and keeping the required records.

In the laboratory our studies would seem to be restricted to tests of efficiency, to the location of the various sources of loss, to experiments on the strength and proportions of different designs, and their relative suitability from the kinematic point of view.

Even so, a very large field is open for work, the results of which should be of considerable practical utility.

The last of the sections (E) into which we divided the subjects of laboratory research had reference to the adaptability for their work, and the economy in use of machines, by which mechanical power is applied to industrial purposes.

I am not here to make out a special plea for the more extended use of the mechanical engineering laboratory by the practising engineer for the sake of the laboratory itself, so much as for the benefit which I believe would ensue upon such use to the engineer himself. It would be quite easy to fill up your time by recounting laboratory researches now going on or about to be undertaken, and which, whilst of great scientific interest, may also turn out to be of practical importance.

Rather than ask your attention to examples which specially lend themselves to the laboratory and its methods, let us take

such an every day occurrence as that in which a judicious opinion as to the relative merits of certain machines is required, and see whether in such a case also the laboratory may not be able to give substantial help.

Take a machine tool. In order to treat such a machine from the proper standpoint, that of economy of production of the finished article it produces, we may state the problem thus:—It is required to machine certain surfaces on a given line of castings, and the question arises as to what determines the kind of machine on which this work can be most economically performed.

The way in which any of you would set about settling this, if you took the trouble, would be to get at the total cost, say per square foot of machined surface, of doing the work on the various machines available. You would allow, as fixed charges, for (1) the interest and depreciation on the first cost of the machine; (2) and the interest, &c., on a proper proportion of the cost of your works in which it is housed, and of the power and transmission plant required to work it. As running expenses you would put down (3) the cost of the power required by the machine and of part of that necessary for driving the shafting. The cost of (4) the materials used in the work, such as tool-steel, oil and waste, belting, &c.; of (5) the cost of adjustment and repairs (including a proportion for shafting and power plant); of (6) the wages of the operator; and of (7) a proportion of the expenses of administration.

If you then divided the sum of these items of expenditure by the total area of surface machined during the time for which the expenses were estimated, you would obtain the total cost of the machine work per square foot of finished surface; and you would have got a figure by which you could compare its performance with that of the competing machine on a scientific, or if you prefer to say so, on a common sense basis.

In machine shops where it has been possible to standardise the work, this is, I suppose, the plan usually adopted in determining the proper way of carrying out a job, and in this way only can all the sources of expense be allowed for and receive their due amount of care and attention.

The workshop itself is obviously the best place to draw correct conclusions in this instance; for there, if time and particulars are all carefully booked, and an electric motor or some such means is used for driving by which power measurements can be made, all the elements of the problem are ready to hand.

It seems to the writer however, that even here something may be said for carrying out the comparison in the mechanical laboratory.

In the first place, a more accurate record of the course of the experiment can probably be kept in a laboratory than in a workshop, where the foreman has so many other duties to attend to; and so far as this goes, the result may be arrived at in a much shorter time. Instruments for measuring the speeds of cutting and the rate of feed are more likely to be at hand, and by the use of special appliances the work actually expended upon cutting and that wasted in frictional or other losses can be compared with the total power supplied to the machine (see Fig. 8). The effect on the accuracy of the work (and therefore the time required to produce a given degree of accuracy) produced by different speeds and depths of cut can be studied from delicate measurements made of the actual distortion of the strained members of the machine; and finally, the personal element can be eliminated by a repetition by the same workman of any article in sufficient numbers to enable him to attain his highest skill.

The question of re-adjustment and repair is, of course, of the highest importance; and it would seem to be very difficult in the limited time available for such a series of experiments in the

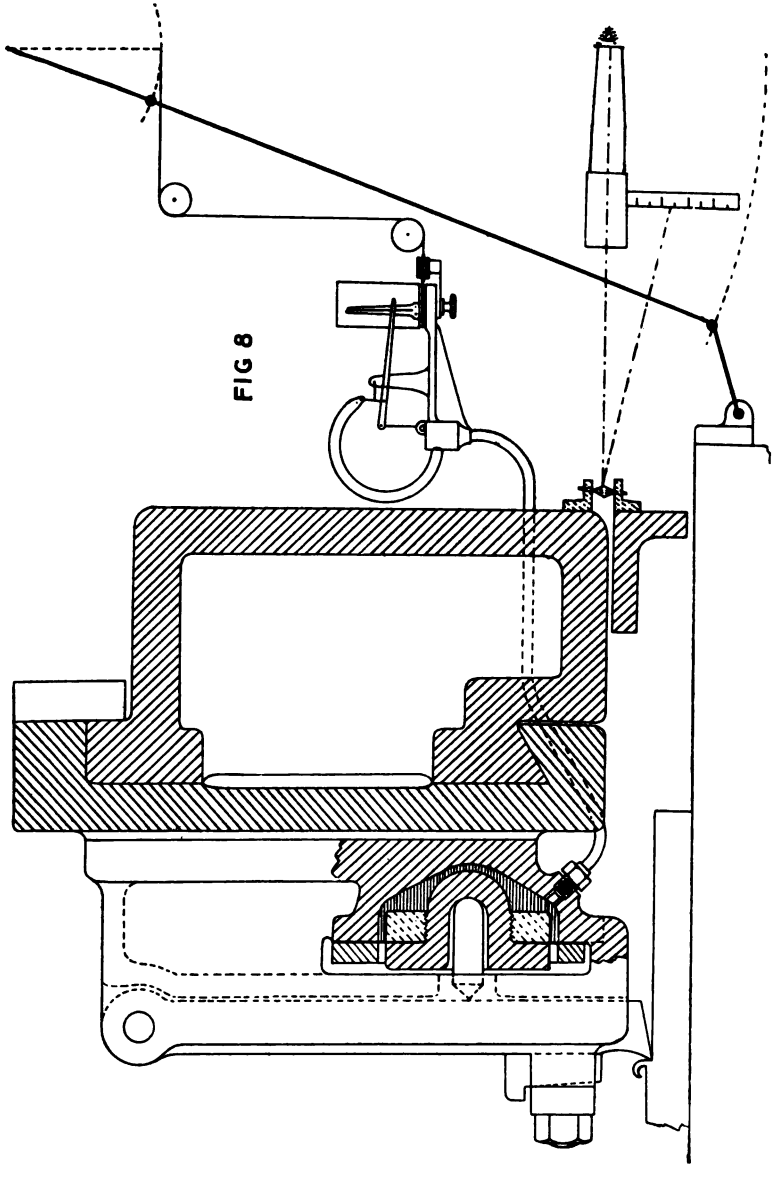

FIG 8

laboratory to give much information on this point. The best plan would seem to be that of using some form of powerful water-cooled friction brake attached to the tool holder in place of the cutting tool and bearing against the work operated by the machine. After working the machine at or near its maximum capacity for periods such as 100 hours consecutively, careful measurements of all the alignments, and trials of the truth of all the rubbing surfaces and feeding mechanisms should be made in order to obtain a numerical estimate of the rate of wear.

In this way the writer ventures to suggest that the mechanical laboratory may be made to give important information regarding the adaptability of different kinds of machine tools for doing the same work; and regarding the relative economy of different makes of the same kind of machine when applied to various uses.

Many difficulties will no doubt be found to stand in the way of the general adoption of such a proposal for determining what may be called the *figure of merit* of a given machine, in the performance of its appointed work; but the writer hopes that none of these will be found to be absolutely fatal, as he believes that some such rational and numerical basis of comparison is urgently required.

As an instance of the views of an eminent tool-maker on this question, I will here quote some remarks from a letter with which I have been favoured by Mr. J. Hartley Wicksteed, of Leeds, Vice-President of the Institution of Mechanical Engineers. He says:—

"Referring to your proposal for arriving at the earning power of a machine tool, I think this is a very interesting proposal, and if carried out would lead to quick and effective reforms in the matter of bad machining, which in many cases is tolerated for years simply because it does not come into evidence in the office. Looking round our shop to see how the

system would apply, the first thing I notice is a lathe saddle, about 4ft. long, being planed on a planing machine capable of planing 20ft. long. The point of difficulty that this suggests is that if you left your large planing machine idle it would be eating its head off without coming into evidence, and it is therefore better that it should be doing a small job, yet if the small job were charged with the costs of a machine capable of doing something 10 times as big, it would be somewhat misleading. I daresay you see the kind of difficulty I mean. It would arise in a general engineering works where there is no such thing as the steady manufacture of one line of articles. Of course I do not mean to put this forward as a hopeless objection, because I have no doubt if your proposal were worked out, it would lead even in general engineering works to classifying the parts of machines most like each other, so that although the machines varied from each other, the analogous parts of each machine would be brought into streams, so that streams of sorted pieces would flow through machinery of the right size for dealing with those pieces."

"To illustrate my difficulty further, we are obliged to have a planing machine that will take in a piece of 30 tons weight, 12ft. wide, 10ft. high and 24ft. long. We have it for the sake of pieces of this size which only occur once a year perhaps, so a great part of the cost of this machine ought to be charged into the big piece when it occurs and not into the smaller pieces which it is doing simply to fill up time which would otherwise be idle. Although a piece of the full dimensions occurs only once a year, yet a piece that required the full size in one of the dimensions occurs say 12 times a year, and a piece requiring two of the dimensions may occur six times a year. This sort of thing makes the question a little complicated, unless one can presuppose a run of work for which you are sure of a market. I must say that a general engineer

cannot count upon this, so there is a good deal of speculation in making an equipment absolutely adapted for the run of work at any given time. Pray do not read these remarks over a second time, as they are not thought out seriously, but only intended to be conversational."

Regarding other forms of work absorbing machines, such as reciprocating water and air-pumps, air-compressors, fans and centrifugal pumps, much might be said, if time permitted, respecting the part which the mechanical laboratory might play in their practical improvement. I will only now briefly allude to one feature to which special attention has been paid in the laboratories which the writer is now engaged in equipping. I refer to the study of the action of pump-valves whether automatic or controlled, which constitute the controlling element in the design of these machines. Hardly anything is known of the laws obeyed by these organs in their opening and closing. Some experiments have been made in Germany by Riedler and Bach. But a comprehensive and simple statement of the effect of the chief factors such as the shape, the size and the lift of the valve, in their effect upon the correct timing of closure, the action of springs upon them, and the relation between plunger speed or rate of revolution and noiseless working has yet to be made out, if indeed it is possible.

It is hoped to obtain results of interest and of more or less importance from machines of this kind, to be installed in the new Technical School Laboratories, by the adoption throughout of means for taking indicator cards of the motion of the valves when working under different conditions; the indicator barrel being driven either from the crosshead as usual, or rotated continuously from the crank shaft, whilst the pencil motion is connected by means of light rods or levers to the valves themselves.

Fig. 9 illustrates the method of taking indicator cards of the motion of pump valves, as designed and made for the Technical School by Messrs. Frank Pearn & Co., on a high speed differen-

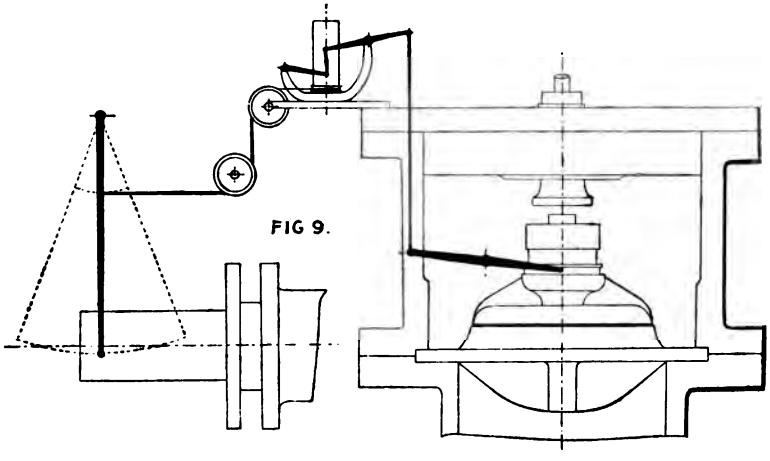

FIG 9.

tial reciprocating pump, capable of delivering 300 gallons of water per minute against a pressure of 300lbs. per square inch.

Figs. 10 and 11 show similar methods applied to the suction and delivery valves of the ammonia compressor of a one-ton refrigerating plant, supplied by Messrs. The Linde British Refrigeration Co., for the laboratories of the school.

For such experiments as these the laboratory is peculiarly adapted and the results ought to prove most instructive, especially if, as in this case, they are obtained upon full-sized plant. The time available in the manufacturers' works cannot suffice for the long continued and progressive trials here necessary; as the machine has usually to be delivered immediately upon completion.

It is especially in experiments of this extremely practical nature that the co-operation of the practising engineer is desired and anticipated, as it is from these that the writer

thinks results most valuable in industrial competition should be secured. I daresay some of my hearers who have a long and successful professional career to their credit, which was not begun with any special theoretical training or experimental

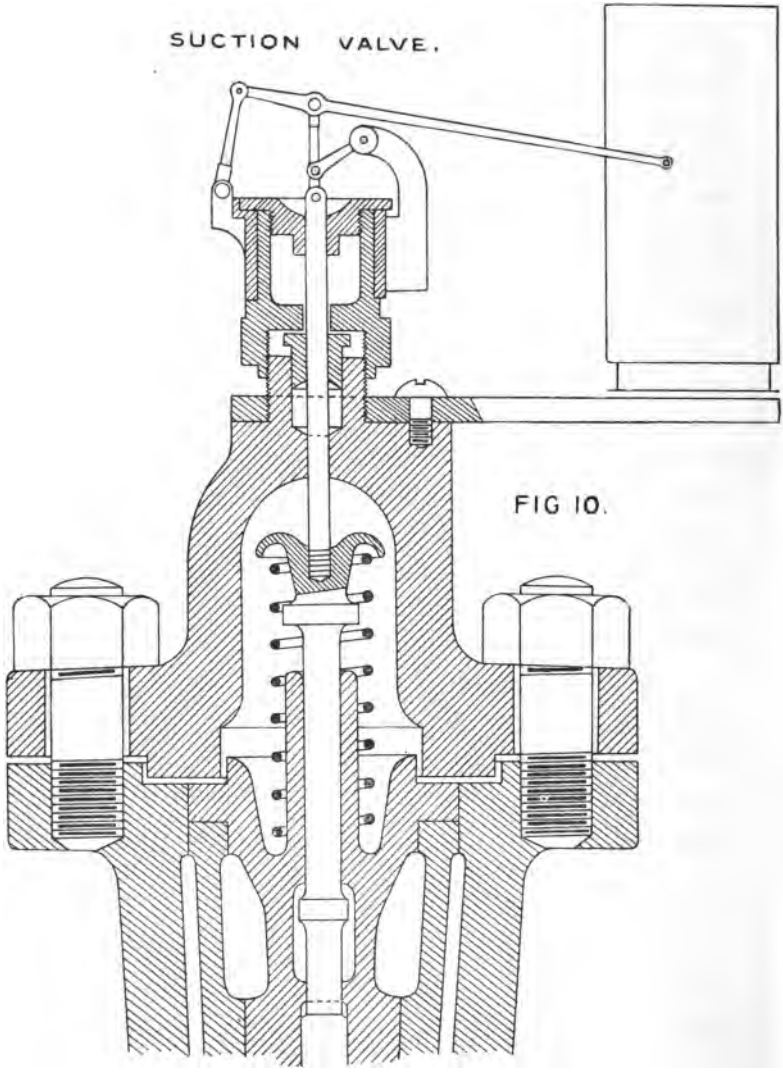

FIG 10.

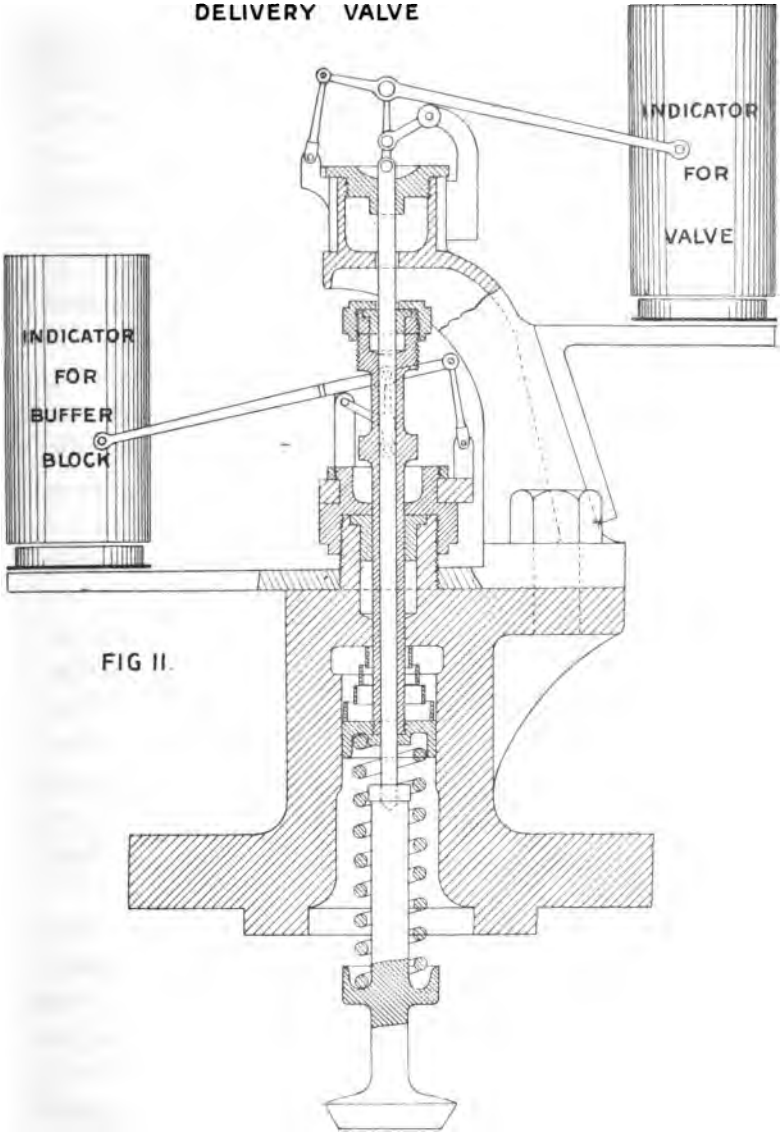
DELIVERY VALVE
INDICATOR
FOR
VALVE
INDICATOR
FOR
BUFFER
BLOCK

FIG II.

practice such as I have referred to, may smile, openly or otherwise, at these new fangled notions; but in reply I will make bold to say that in the past all of us may have worked more or less in error, not only the men of theory but also the men of practice. Theoretical men have often been led to employ, on problems that can only be regarded as ingenious mathematical exercises, much time and mental exertion that would have been better bestowed on questions having a closer connection with practical subjects; whilst on the other hand the men who are distinguished by skill in judging of the qualities of materials and work, and in directing the operations of workmen by that sort of skill, in fact, which is purely practical and acquired by observation in business, have frequently been lacking in that higher scientific skill which can produce the greatest effect with the least possible expenditure of material and labour. They were content to use "plenty of iron and very little brains"—as a French critic of English engineering puts it.

The mechanical engineering laboratory seems, however, to open the door to the region where theory and practice will be completely harmonised. For here can be undertaken that close study of mechanical operations which is necessary for the correction of imperfect theories; and here also can be secured that theoretical guidance which results from the insight so obtained into the true inwardness of the processes by which man utilises the forces of nature.

In the above remarks I have attempted, very imperfectly I fear, to indicate certain lines of experimental work along which progress is desirable, as, by entering upon these, the scope and usefulness of our mechanical engineering laboratories could be very profitably extended.

If the attempt to convince my hearers that something more ought to be done than is at present overtaken, the chief object

of this paper will have been attained. The writer himself is strongly of the opinion that the serious attention of the British engineering community must at once be given to this and similar educational matters, if they are to maintain the industrial supremacy so long enjoyed.

If it be admitted that such work as has here been described has a real significance in regard to the tremendous industrial struggle upon which as a nation we appear to have entered, then the practical question arises: *By whom and when are such extended programmes of experimental work to be carried out?* The necessarily meagre staffs of our engineering and technical colleges are wholly inadequate, and help must be looked for from those who will most directly benefit by the results obtained; the engineering employers. *The matter is entirely in their hands*; for it is within their power only, by maintaining a proportion of their more experienced and better educated employees at work in the laboratories for comparatively lengthened periods, either wholly or partially at their own expense, to have carried out these researches on matters connected with their daily work, which must in future be undertaken by British engineers if they are not to degenerate into mere manufacturers and salesmen, or to become, in short, only the copyists of what is being invented, discovered, or perfected by our better educated or organised competitors, the Germans and the Americans.

Nor is the material in the shape of students at present supplied to our Engineering Colleges and especially to our Technical Schools, consisting as it does for the most part, of mere schoolboys or raw half-educated youths, of much avail for the purpose here in view. Owing to their lack of practical experience they are almost, if not altogether, incapable of making use of the advantages afforded them. I have had some considerable experience in these matters, having served a four years'

apprenticeship; worked in a number of drawing-offices; studied in one and taught in two other Universities; and spent nearly a year in a Foreign Government Laboratory; and, as the result I will undertake to say that it is advisable that *a period of workshop practice should precede the Engineering College course.*

This is not at present possible; because our employers are (naturally) unwilling to encourage the older lads, who have been with them for a few years, and who are often capable of doing journeyman's work for apprentice's pay, to leave them for the purpose of attending College; although to my personal knowledge they would then make more progress in a month than the mere schoolboy can do in a session.

In conclusion the writer can only reiterate the statement that the proper education of our young engineers depends upon the attitude of the employers towards it, and upon nothing else; for if *they* do not realise the national significance of such higher scientific training as is here contemplated, it is useless for the Heads of our Colleges and Schools to thrust forward their projects in their despite.

If they will not be convinced that it may be to their ultimate advantage to make some present sacrifice in order that their successors may have such a training as that now given to the young engineers of the United States, and of our own Colony of Canada, then it only remains to hope that we shall pull through by the mere cogency of the fact that we are not foreigners; or to view, with what philosophy we may, the advent of that commercial disaster which our American critic, Mr. Brooks Adams, believes must happen to us in order to arouse us from our lethargy.

DISCUSSION.

The CHAIRMAN (Mr. Henry Hodgson) remarked that Manchester was evidently not going to be behindhand with respect to the new Technical School, which would be one of the leading—if not the leading—institutions of that kind in the world. The school being there, it was for the engineers of the district to make use of it, whether this cost money or not. The question was not one of money, but in many cases of keeping works going. The inroad that was being made upon the engineering trade of the country by the Americans, and to some extent by the Germans, was becoming a very serious matter. They had heard a good deal about locomotive orders going to America, but he might point out that there were a good many stationary engines at work in the United Kingdom that had been built in America. If we were to maintain our position in the engineering world we would have to pay more attention to technical instruction and other things that would keep us abreast with the times.

Mr. ALFRED SAXON said that Dr. Nicolson was greatly interested in certain valve leak experiments, and personally he would suggest—as he had previously done—that a Research Committee might be appointed by the Association to assist in these investigations, and make a report to the Association. In other ways also the Society might take the lead, in assisting the work of the school, but if the matter was left to individual employers or employees he feared that nothing would be done at all. If that Association could co-operate in some way with the Technical School and Committee, particularly on the mechanical side, some good might be effected both for themselves and the rising generation. With regard to the testing

of planing machines he might point out that the greatest power was absorbed not in the cutting but in the reversing of the machine. They had at any rate proved this to be the case in their own works, where they had adopted motor driving, and consequently could test the point with accuracy.

He had often thought that that Association might do something beyond the holding of discussion meetings, and if they could, by assisting in experiments or in any other way, help on this new Technical School, he felt that they would be doing something which would help on the industries of the district and benefit themselves as well.

Mr. Hans Renold said he was pleased to hear of the great variety of work which was being undertaken at the new Technical School. He was so hopeful on this matter that he almost looked forward to the new school as likely to prove the salvation of our mechanical industry. He was extremely pleased to know that Dr. Nicolson was taking in hand the investigation of details, which although apparently small things, meant a good deal in the end. In England engineers had too often been faulty in neglecting details, and he hoped the engineers of the district would make use of the new school, and that England would not lag behind in the matter of technical instruction.

Mr. A. L. Mellanby observed that within the last few months many speeches had been made before the Association upon educational matters, but he thought they ought to thank Dr. Nicolson for bringing before them the definite scheme they had heard that night.

The great fault of almost all the educational speeches we heard at the present time, was that they seldom presented to us any practical solution of the problem "how to improve the training of British engineers?" The professional educa-

tionalists did not seem to realize what was needed, and so each presented his own pet scheme. The only point upon which they generally agreed was what he considered the most dangerous suggestion, that classical subjects should be eliminated from the curriculum of intending engineers.

Dr. Nicolson stood, at present, almost alone in advocating the formation of an Educational Institution where research could be carried out upon actual machines. Such a proposal must command the approval of all engineers. Especially would those manufacturers, who were not content to jog along in the old ruts, appreciate the importance of a laboratory to which they could either send their best designers to experiment upon machines embodying new ideas, or where they could have the experiments made for them by a highly trained staff. Equally would such an Institution be welcomed by the older engineering students, who would there be able to obtain that theoretical knowledge so essential for high class designing, and at the same time to carry out research work in almost every branch of mechanical and electrical engineering. It was lamentable that the engineering laboratories of so many of our English Technical Colleges were merely places in which indicator diagrams were taken, or specimens broken in the testing machine, and all would be glad to hear that Dr. Nicolson proposed something so very different in the new Technical School.

To illustrate the commercial importance of engineering research he gave the following example :—About ten years ago, Professor Riedler, who has so great a reputation as a scientific engineer, was requested to report upon the Paris compressed air installation. At that time practically the whole of the plant had been supplied by one English and one Belgian firm. Prof. Riedler made careful experiments and found that due to bad design and ignorance of scientific principles the losses in the compressors were some 40 to 50 %. He therefore constructed

an experimental compressor, and after working upon it was able to reduce the losses to about 12%. The immediate result of this was that when another installation of 10,000 HP was put down in Paris the new machines were all Riedler compressors. The English firm was entirely left out, although it had been first in the field.

It was only fair to say that many of the most celebrated firms in Great Britain were quite alive to the value of proper research work. As an illustration he would point to the action of the engineers on the North-East Coast, who had made and presented an experimental engine to the Durham College of Science; whilst it was a matter of common knowledge that much of the prosperity of Messrs. Armstrong & Whitworth was due to the scientific researches of Sir Andrew Noble.

He agreed with Dr. Nicolson when he said that the best time for an engineering student to enter a Technical College was after he had spent some years in an engineering works. The student was then in a much better position to appreciate the importance of what he was being taught, and to take advantage of his valuable opportunities.

In conclusion, he hoped that as the Association had set the example to all other societies in discussing educational questions, it would be the first to bring the matter to some definite practical conclusion.

Mr. James Saxon said there was no doubt that the laboratory was a help to the practising engineer. There was also ground for Dr. Nicolson's complaint that engineering employers had not looked with favour on receiving young men from Technical colleges as ordinary apprentices when they had passed a certain age. He thought they would have to see how it could be arranged to allow apprentices, after spending a certain time in

the shops, to go back to the Technical College and complete the course, and then return to the works. The author, however, had looked rather too gloomily upon the British engineering industry. During the last few years English engineers had brushed up very considerably, and the increased attention they gave to technical education was a distinct evidence of that.

As to the development of the steam engine, some people thought we had got it to a fairly fine pitch of perfection, but the percentage of coal wasted as given by Dr. Nicolson showed that we were far from finality in its development and perfection, and attention would have to be paid to this and also to the boiler, which was the more wasteful apparatus of the two. If there was to be much benefit derived by engineers and students from laboratory work the plant would have to be full size, as in the past much erroneous data had been obtained by using microscopic models having no relation to the apparatus or machines used in actual practice.

In connection with employers allowing their apprentices facilities for attending a school after two or three years in the shops, he fancied they might have difficulty in inducing the ordinary working man to allow his son to leave work at that period to attend a technical school, at which fees would have to be paid, whilst nothing was coming into the home as the apprentice's earnings. That difficulty would require to be got over.

Mr. W. Ingham said he knew of one firm that encouraged its apprentices to go to the technical school, and assisted the smarter youths by sending them to a school for a certain time during work-hours. Employers might form a fund by the aid of which a youth showing aptitude could after two or three years in the shop be assisted in attending a technical school, and getting instruction there that was applicable to his trade.

Many parents, he knew, would be only too glad to send their boys for two or three years to a Technical School, were it not for the difficulty of getting them in an engineer's shop when they got 16 or 17 years of age.

ALDERMAN HOY said that the very considerable expenditure incurred on the building and equipment of the new Technical School could be well and easily justified if it were proved that those for whom it was intended were ready to make use of it, and take advantage of the opportunities it would offer. The Committee had devoted a good deal of thought to the question of how they could interest the mechanical engineers of the district in the work, and as to how they could be of use to them, and from the tone of the remarks made that evening he felt very much encouraged. The practical suggestion that the Association should form a Committee for the purpose of working jointly with the School Committee and the leaders of the department in the new school was a most valuable one, and he could promise them on the part of his Committee, that whatever could be done to strengthen the department from the point of efficiency of implements of various kinds would not be wanting.

If the engineers would set themselves to show that they could and would find means of bringing within the walls of the school those most likely to make beneficial use of what was provided, they would be met by the most cordial co-operation and the most earnest desire to place at the disposal of those students, and any who were anxious to enlarge their knowledge and better their position, all the material by which such an end could be effected. He hoped they would help the development of the Institution, and they might be able by means of a Committee of their own body to furnish such assistance as would put the whole thing through in a proper manner.

Mr. J. H. Reynolds observed that the author had raised the question of the period when the school was to be made available for the training of engineers. He was bound to say, from his own experience at the existing Municipal Technical School, that it had received very little assistance from engineering employers, and students attending it had as a rule come of their own free will and had not sought the patronage of employers in any shape or form. Dr. Nicolson thought a young man ought to have been in a workshop for some time before entering the laboratories of the technical school. All he could say was that there was very small chance, under present conditions, of getting such young men into the school. Very few had come in that way.

He would like to ask whether or not there was a possibility of giving to youths, on top of a fairly good general education, some direct training in engineering matters before they entered the works. Such preliminary training was of great advantage. The technical school, with its fine equipment, would serve a useful purpose in affording special facilities for research, but it was primarily a training institution for those who intended to become engineers, industrial chemists, &c. It should also be useful in sifting students, and in finding out whether they were suited to any particular trade before they entered it. For these reasons he advocated a preliminary technical training, and employers might afterwards consider what facilities could be given for further special practical study at the technical school or college after the youth had spent a certain time in the works.

The Chairman (Mr. Henry Hodgson) said the suggestion as to a Research Committee was an important one, and would be brought before the Council. It had been said that there would be difficulty in the matter of apprentices attending technical

schools owing to parents wanting the money—lads' wages that would be lost while they were at school. A solution might be found by paying the lads' wages for both the time he was at work and the time he was at school. He did not think employers would be the losers thereby. He hoped something definite might be done in this direction. He would suggest to Alderman Hoy that the Technical Institution Committee should circularise the employers in the district and ascertain their disposition with regard to supporting the school, not only financially, but by affording facilities for promising youths to attend it.

He had pleasure in moving a vote of thanks to Dr. Nicolson for his paper.

The motion was unanimously adopted.

Dr. Nicolson, in his reply, said the idea of a research Committee was very good, but what he should like to see would be a Committee of Engineers to take up the practical question of arranging how men were to be got into the laboratory of the school to do the work. Whatever scheme might be the best, if an influential committee of engineers were appointed to put the thing through, any practical difficulties in the way would have to disappear.

Objections had been raised to the fundamentally important view he had expressed on p. 112, that "*it is advisable that a period of workshop practice should precede the Engineering College Course,*" of the future mechanical engineer. He knew that this proposal was not regarded favourably by the majority of engineering educationalists. But he was persuaded that this arose from the fact that they knew that if they did not get the youths into their engineering and technical schools immediately on leaving school they had a small chance of getting them at all. It was a policy of expediency, and would disappear as soon as the employers could be brought into line with

those of other countries, so as to make arrangements enabling the best of their employees to take advantage of the facilities for experimental work which ought to be provided on a practical scale in the more important industrial centres. He had had ten years' experience in Canada in teaching youths of both types, and he was satisfied that the men who were best able to take advantage of an experimental course of engineering study were those who had spent some time in practical engineering work. The raw lads from school were, as a general rule, outclassed by such students, as the former were generally stale with too much bookwork, and failed to realise the important bearing their theoretical work might have upon their future practice; whilst the latter, whose curiosity and interest had been stimulated by contact with actual engineering, fastened with avidity upon the mental pabulum placed before them.

There would, he believed, be found to be an important difference between the course he was now advocating—of the kind given at such places as McGill College, Montreal, Sibley College, Cornell, and the Massachusetts Institute of Technology—and that which his critics probably had in mind when advocating the immediate transference of the student from school to college. Whilst it might be true that a curriculum consisting largely of bookwork would be entered upon with greater facility (although far less freshness) by boys newly from school, than by lads who had been only able to keep up their theoretical knowledge by attendance at evening classes; this was certainly not the case when a large proportion of the college work was carried out in the laboratory. When it came to experiments, in which resourcefulness, initiative, and a sense of proportion played a great part, the students who had had a practical training in the workshop had a great advantage; so much so that whilst the schoolboy might be at the top in the junior year, the shrewd mechanic generally overhauled him before the

end of the course; and, as a matter of fact, there was no comparison between the two classes of men as to fitness for a position of trust when leaving the college.

No doubt it was difficult to get the men to come back to college after they had once started work; but he believed that if engineers could be made to see the great advantage of giving men their mental training after some practical experience had been undergone, the matter could be arranged by them and the educational authorities jointly.

Would it not be possible for the employers to pick out a few of the best of their apprentices—say in the second year of their (five-year) apprenticeship—and give facilities for them to attend college during the winter, whilst working the summer six months in the works. He (the author) was sure that an industrious boy of good ability would be able to not only keep up what he had learnt at school, but (between the ages of sixteen and eighteen say) add sufficient mathematics and mechanics to enable him to enter upon the college course in a state of sufficient preparedness to cover the ground sketched out in his paper in three winter sessions of six months each.

In return for the advantages thus afforded him the student should be under agreement to stay with his employer a certain number of years after the end of his apprenticeship; and apart from the ultimate advantages to the profession of such training, he (the author) believed that a substantial and immediate practical benefit would accrue to the employer by the adoption of certain practical research methods it was hoped to establish at the new Muuicipal Technical School, Manchester. There it was intended that the last two or three months of the course should be spent by the student in a research on any question in which his employer might happen at the time to be interested. The employer would, it was hoped, supply the machine or instrument he wished studied, and the student would be enabled,

with the assistance of the trained staff, and by the use of the experimental facilities of the school, to obtain results of real practical value; which would be the property of the employer of the student in question.

In conclusion, he hoped that something better would be attempted in the future than had been possible in the past. From all he could learn, a large proportion of the money spent on technical education in this country had produced no useful result, and he was afraid the blame for this lay largely with the engineering employers.

Mr. James Saxon thought the Council of the Association might communicate with engineering employers in the district and ascertain if they would be willing to afford facilities to encourage promising apprentices to follow out a course in the Technical School during working hours. It would have a better effect on the employers than if they were approached by the Corporation Committee interested in the development of their own school.

The President asked Mr. Saxon to bring this matter up at the next Council Meeting.

Mr. S. Rendell wrote:—I have been very interested in reading Dr. Nicolson's paper. Having been a member of the old Mechanics' Institute, and subsequently for a short time an evening class teacher of engineering in the Manchester Technical School, I am glad to learn that true technical work is to be entered upon with full-size machinery.

The leakage of steam valves is well deserving of attention. I have long been suspicious of them. It would be instructive, not only to have a series of tests of the valves mentioned, which are used in stationary engines, but also of the ordinary D slide,

unbalanced and balanced, the Trick-ported valve, and the piston valve, as used in locomotive and marine work.

I fear the piston valve is often a great sinner in respect of leakage. The best method of packing it is a much-disputed question. The fact of its having to pass the ports, and being always subject to full steam pressure whilst running, places it in a more trying position than an ordinary piston.

With reference to the flow of water through pipes, valves, &c., the maximum pressure of 300lbs. per square inch seems to me too low, in view of such pressures as 700 or 800lbs. for ordinary hydraulic installations, and 1,700 or 1,800lbs. for riveting and other machinery. 300lbs. for water is not on a footing with 250lbs. for steam.

Very useful work may be done in an engineering laboratory in the way of investigating the power required by various machine tools, and obtaining the "figure of merit" in each case. On this head engineers are comparatively in the dark.

If arrangements could be made by our leaders of industry to install in this country a plant for testing locomotives similar to that at Purdue University in America, no doubt fresh light would be thrown upon many points at present treated largely as matters of opinion. Tests could be made with such an apparatus which are quite impossible on the road.

I can endorse Dr. Nicolson's remark that a college course in engineering should follow, and not precede workshop practice. My own experience during four years at Owens College, after having served an apprenticeship in a Tyneside engineering works, was that I more fully grasped, appreciated, and saw the practical bearing of what was taught than I should have done as a raw school-boy. Many promising young fellows, however, who have passed through the shops, become so elevated with a college course that they look upon the dirt and drudgery of a

works as beneath them, and at the close of their term they remain as assistant teachers, and are lost to commercial engineering. Probably the establishment of such a laboratory as that described, in connection with the engineering department of a great technical school, will have the double effect of securing the interested confidence of the practising engineer and keeping the students in touch with actual work.

ENGINES FOR DRIVING LARGE DYNAMOS.*

READ SATURDAY, 12TH OCTOBER, 1901,

BY

Mr. CHAS. DAY.

In the early days of electrical engineering, dynamos were designed without special reference to engines. Engines of suitable power were then obtained and set to drive the dynamos by means of belts or ropes. This practice may be said to be absolutely abandoned, and large dynamos are now invariably fixed direct to the engine crankshafts so as to save space transmission losses and cost of belt up-keep.

On the Continent and in America slow-speed engines have been almost exclusively adopted, but in England by far the majority of engines to be found in Electric Generating Stations are high-speed, and it is interesting to consider why English engineers have not followed the American and Continental lead. The answer is at once creditable, and otherwise, to English engineers. Creditable, because our engineers have had the courage to take a new view of the situation and back their opinions by tackling the manufacture and design of high-speed engines, the result being that to-day no country in the world is producing high-speed engines equal to those obtainable here.

On the other hand, one wonders why, if foreign builders of Corliss and drop-valve engines can do such a large trade in engines for dynamo driving, our builders of Corliss engines should have done so little. Is it that they have lacked in enter-

* This paper was read in conjunction with a visit of the Members to the Works of Messrs. Ferranti, Limited, and to the Manchester Corporation Electric Light Station.

prise, or have been too busy with other work, or is it that they foresaw the high-speed engine and preferred not to invest their capital in the extensions which were necessary to enable them to take up additional Corliss engine work, the demand for which would not last? We have to-night amongst us many who are connected with firms of slow-speed engine builders, and I have ventured to make these remarks in the hope of hearing something on this score.

An interesting feature in the electrical trade is the steady increase in the size of plants. A few years ago a 500 horse-power engine and dynamo was considered large. To-day it is distinctly small, and about thirty electricity generating stations in Great Britain have engines of 1,000 HP and upwards.

Though England is behind America and the Continent in the number of these large units, we can, at any rate, claim to have been practically the first to point out the advantages of large units and high electrical pressures, as 15 to 16 years ago Mr. Ferranti urged the advantages of these, and in 1887 commenced the Deptford station. At this station several 1,500 HP engines made by Messrs. Hick, Hargreaves & Co., have been at work since 1888, and in addition to this, engines of 10,000 HP were designed and partially manufactured, also by Messrs. Hick, Hargreaves, the dynamos being made by Mr. Ferranti. Thus it will be seen that both English engine builders and English dynamo builders were quite early in the field on very large sizes. Unfortunately, the timidity of investors caused the abandonment of the 10,000 HP sets. A comparison which I have made recently of the drawings and specification of these engines, also of the drawings of the dynamos, with large sets now being made, show remarkably few differences, and there can be little doubt that had these sets been put to use they would have proved successful and would have been a great benefit to the engineers of this country.

Turning to the question of speed, the slower development in England of the use of electricity may to some extent explain the prevalence here of high-speed engines, as both in America and on the Continent the size of unit has grown at a greater pace than has the size of high-speed engines. Most of you are aware that it is within quite recent years that our English builders of high speed engines have reached sizes of 1,000 HP, builders of dynamos of large power have therefore been compelled to adopt slow-speeds, and the methods of standardisation in America and Germany have helped to consolidate practice on to slow speeds.

On the other hand the question of speed is not only decided by the engine but is affected by considerations of dynamo design, at any rate as regards continuous-current dynamos. The use of these latter in connection with tramways and railways, where load is very irregular, has shown that at high speeds of rotation the difficulty of keeping free from sparking at the commutator is greater than with slower speeds. The difficulties of commutation have however been thoroughly surmounted up to speeds quite midway between those of slow speed trip gear engines and the prevailing speed of high speed engines; hence, the best policy in regard to engines of large size seems to be, to run at speeds higher than is permissible with trip gears though not high enough to introduce doubt as to sparkless commutation; with either single or multiphase alternating dynamos there are no commutation difficulties, and practically any speed can be adopted.

The advantages to be derived from increased speeds are:—

(*a*) Less floor space, and consequently less cost of land and buildings.

(*b*) Cheaper dynamos and cheaper engines.

(*c*) Better turning moments.

On the other hand, increase of speed introduces disadvantages

such as:—greater throwing about of oil, greater tendency to vibration, difficulty in securing automatic expansion, and necessity for more perfect lubrication.

The time at my disposal will not permit me to explain how these difficulties have been faced in Willans, Belliss, Browett Lindley, and other high speed engines, hence I am compelled to confine myself to the engines made by Messrs. Ferranti, Ltd. I will therefore proceed with a description of one of these engines, and deal with the points just mentioned in their turn.

TYPE OF ENGINE.

The type of engine adopted as a standard is the cross-compound vertical. The reason for our adoption of this type has been to secure a crankshaft having only two bearings, the dynamo being placed in between. By this means any trouble or increase of friction by imperfect alignment or by unequal wear of bearings, or by foundation settlement, is minimised. Another reason, though of less importance, is that in most electrical stations the load varies considerably, and to meet this we have thought a compound engine better than a triple. It is also to be remembered that the introduction of superheating will tend to take away any slight advantage in economy which a triple expansion may have over a compound.

Another reason for the adoption of the cross-compound is that there are only two cylinders, and therefore the number of heavy working parts is reduced to almost a minimum.

The vertical type was adopted to minimise floor-space and cylinder wear. Where desirable, the engines can be modified to triple or quadruple expansion without interference with other features of the design.

CLEANLINESS.

For electrical work cleanliness is of the utmost importance, and the throwing about of oil or the creeping of oil along the crankshaft on to the armature must be prevented at all costs.

This has been a difficulty to cure which considerable and very close attention to detail has been necessary, but these oil troubles have been entirely got over by thorough enclosing, and a suitable arrangement of oil throwers on the crankshaft.

LUBRICATION.

To ensure complete lubrication of all principal bearings, forced lubrication has been adopted. The advantages and disadvantages of this I briefly dealt with in a short communication to this Association last year. From Plate 1 you will note the arrangement of filter which has been adopted in connection with the forced lubrication system. This filter is arranged in the engine bed frame, and its object is to thoroughly cleanse the oil passing to the various bearings. By the arrangement adopted the oil is thoroughly filtered just before it is fed to the bearings. I have heard it suggested that this frequent filtration is likely to be detrimental to the oil and to cause it to lose its "body." We do not find this to be the case, and so far as I can see such a trouble only occurs when the "body" is a added one, and one which ought not to be there. The use over and over again of a quantity of oil will however, if the engine is kept running for a long time, cause the oil to gradually get hot; thus, it is necessary for long runs to provide a water cooling arrangement, and this has been met by the introduction into the oil tank of a copper cooling pipe, also shown in Plate 1.

The method of lubricating the valve gear is, so far as I know, unique for valve gear, though extremely simple, and consists in surrounding the valve gear by a casing and filling this casing with oil. Thus the whole of the valve gear works immersed in oil, rendering the engine attendant's oil can quite superfluous.

VALVES.

With a view to securing the economy of the slow-speed Corliss engine, cylinders each having four valves, *i.e.*, steam and admission valve at each end, were adopted, but these instead of

being Corliss valves are of the grid type, and are moved backwards and forwards; the gross movement of the HP. valve during one revolution of a 1,000 HP. engine is 1¼ inches. At 214 revolutions per minute this gives the low valve surface-speed of 22 feet per minute, and I think you will agree with me that such a low surface speed is an excellent quality as regards wear.

Another point to be noted with these valves is that they are placed in the covers so as to minimise clearance and give very short direct ports. The total volumetric clearance can be kept very low, though I hardly think it desirable for practical reasons to keep the clearance volumes extremely small.

An important feature in the valves is that they are perfectly free to follow the wear, and I can say positively that the running of the engine improves the valves and not otherwise, hence, after 12 months work the valves are tighter than when the engine commences work. Valve tightness undoubtedly has considerable influence on engine economy, and it will therefore interest you to have some reliable figures as to the economy of these engines.

At a test of a 500 HP engine at the Cardiff Electric Lighting Works the steam consumption per IHP was 15·6lbs. and per K.W. 24lbs. This was with a boiler pressure of 140lbs. and a vacuum of 18·7ins. The figure which we guaranteed was 26lbs. per K.W. with a vacuum of 27ins. On account of the deficient vacuum provided by the separate condensing plant a calculated allowance was agreed upon, and this brought the steam consumption to 13·8lbs. per IHP per hour and 21·8lbs. per K.W.

This test was made after the engine had been in fairly regular service for 18 months, and as the test was supervised by Mr. Michael Longridge, Mr. Burstall (of Messrs. Burstall & Monkhouse, Consulting Engineers), Mr. L. B. Atkinson, Consulting Engineer of Cardiff, and Mr. Mountain, Electrical Engineer to the Corporation of Huddersfield, the figures can I think be con-

sidered absolutely reliable. All instruments were properly checked and calibrated independently, the electrical instruments being checked by the Board of Trade.

VALVE GEAR.

The whole of the valve gear is centralised in the box seen on the general illustration of the engine (Plate 5) midway between the cylinders. Seen open this box looks somewhat complicated. On second thoughts it will be appreciated that there is really no more complication than with a Corliss engine if the wrist plates, valve levers, dash pots, trip levers, etc., were, instead of being fixed separately on the cylinders, gathered together midway between them and enclosed in a box. The object of this enclosing is to enable the valve gear to be flooded with oil.

The valve spindles are operated by means of cams, which cams revolve at half the speed of the engine. The arrangement or driving the exhaust valves is illustrated diagrammatically (Plate 2). By this arrangement a very easy motion of the valve is obtained, and the connection between the cam bridle and the valve is an absolutely straight one, there being no moving joints or pins.

The arrangement for driving the steam valves is slightly different, owing to the necessity for obtaining automatic expansion. Each steam valve has two cams, one being the opening cam and the other the closing cam. The opening cam has a fixed angle of advance and thus gives constant lead. The cut-off cam has its angle of advance variable by means of the governor, and thus cuts off earlier or later. The action is illustrated by Plate 3. The handle of advance of the closing is adjusted by means of a spiral or scroll, this scroll being lifted or pushed down by the relay piston, which in turn is controlled by the governor.

A particular feature of the cams to which I would draw your attention is that they are constant in diameter, that is to say,

the distance between the cam rollers is quite fixed. The method in practice of securing absolute uniformity of diameter is by testing the cams in a sliding frame carrying fixed rollers. The equality of diameter is further illustrated in the model on the table. This arrangement makes it possible to drive valves positively by cams in two directions, thus doing away with the spring return usual with cam gears. The cams have a positive push and pull, but in addition a spring is arranged which allows the rollers to remain in contact with the cam in case of any slight irregularity in diameter or in case of slight wear of the cam.

GOVERNOR.

The arrangement of the governor and its connections is also of considerable interest, and shows one solution of the problem of governing by automatic expansion, engines of large powers and of speeds too high for trip gears, as with this arrangement there is absolutely no limit to the size of engine which can be thus governed.

I believe that the first step necessary to secure good governing is that the governor must not have any heavy parts to move, or parts which are subject to heavy forces: in other words, the governor must not be called upon to do much work. This condition is very well met in Corliss engines where the governor simply acts on a trip-gear, but I do not consider it would be well met if the governor acted direct on to the piston valve controlling the steam distribution in the HP. cylinder of, say, a 2,000 HP. engine, as the work to be done by the governor would then be heavy, a piston valve of such a size having necessarily rather great mass, the moving about of which would necessitate the governor exerting considerable effort; the friction also would add a considerable amount of work, and if minimised by dispensing with spring rings from the piston valve, there would be considerable risk of leakage with the attendant result of bad

economy and bad governing. The objection to a trip gear is that it cannot be worked satisfactorily at high speeds.

The whole object then of the valve-gear adopted by Messrs. Ferranti, is to permit of high engine speeds and at the same time put no load on the governor. In Plate 4 (*a*) is the governor; (*b*) the governor lever, one end of which is connected to the spindle of a small piston control valve (*c*). This control valve has oil under pressure between it, hence if lifted slightly the top port is opened and the oil under pressure is admitted to a port leading to the upper side of the relay piston (*d*). Thus this piston is forced down. If, on the other hand, the control valve is lowered the pressure is taken to the bottom of the relay piston, and this is forced up. As already described this piston is connected to a spiral (*e*) which alters the angle of advance of the cut-off cams and thus changes the point of cut-off. If, then, the speed of the engine rises on load going off, the governor lowers the control valve and the piston (*d*) is forced up until the cut-off is sufficiently early to balance the reduced load, and *vice versa* in the case of increase of load.

It will be noted that all the work which the governor does is that of operating a very small piston control valve, which on large engines can easily be worked with one finger. It may, therefore, be reasonably claimed that the principle of removing work from the governor has been fully met. Unfortunately the arrangement as described so far does not fully meet the case, first because it would try to give absolute constancy of speed, and, secondly, because it would be difficult to avoid hunting, as the relay piston owing to its quick movement would not just go to the position necessary to balance the load, but would almost certainly overshoot the mark, and thus have to be brought back. Both difficulties have been overcome by the addition of the lever (*f*), dash pot (*g*) and spring (*h*). Before explaining the action of these parts I will deviate for a moment to answer a

question which naturally arises, viz :—"Why is constancy of speed an objection ?" The answer is that for working dynamos in parallel some deviation from isochronous governing is necessary to secure the equal distribution of load amongst the dynamos. In illustration take the following case :—two engines each of 1,000 HP are driving alternators working in parallel, one engine has an isochronous governor, whilst the other has a governor with, say a 6 % range between full load and no load. Suppose each engine to be running at 200 revolutions per minute and loaded to half load, and that 500 HP suddenly comes on. The additional load would slow both engines down slightly, the consequence being that the isochronous governor would drop right down to its bottom position and give its engine its maximum quantity of steam, thus causing this engine to take up the whole of this additional load ; whereas, had this engine had a 6 % governor like the other one the governors would have opened out equally and the load been divided equally. If both governors were isochronous a very unstable condition would occur and the load would have a tendency to flow from one engine to the other.

Turning again to Plate 4 it will be seen that when the relay piston is at the top of its travel the spring (*h*) is compressed considerably, but when the relay piston is at the bottom the spring is much less compressed, thus when the cut-off is late the load on the centre of the governor is much less than when the cut-off is early. Consequently the governor speed is greater at light loads than heavy loads. By means of this small spring the range of the governor between no load and full load can be made anything which may be most suitable for running in parallel with other engines in the same station, and this result is obtained without any material movement of the governor itself. The action of the dash pot also deserves attention. Suppose that the control valve opens at the top. The relay

piston moves down, lifting the dash pot piston up. The dash pot cylinder is filled with oil and thus there is a tendency to lift the governor up and cause it to return to its central position, and thus stop the movement of the relay piston. By this means the speed of action of the relay may be made fast or slow as is desired. The oil pressure which works the relay is obtained from a separate valveless pump, and an air vessel is provided to secure practically constant pressure.

With installations including rotary converters, great rapidity of action of the governor is not desirable and is liable to produce hunting at the rotaries. The facility with which the speed of governing can be adjusted, as just mentioned, is therefore very useful in such a case.

On large engines automatic expansion is preferable to throttle governing apart from any question of economy, as very large throttle valves are difficult to keep steam tight and at the same time quite easy to move. When a good fit they are very liable to stick, especially if the engine is not in regular service.

Again, with automatic expansion there is a smaller volume of steam between the controlling valves and the piston than with throttle governing, hence the increase of speed when load is suddenly thrown off is not so great.

EMERGENCY GOVERNOR.

To meet the requirements of many electrical engineers an emergency governor has been fitted to the engine. This governor is arranged to come into action at a slightly higher speed than the main governor and it is connected with an ordinary equilibrium throttle valve; thus in case of the main governor not controlling the speed properly the governing would be taken up by this emergency governor.

It is a fairly common practice to arrange for the emergency governor when it comes into action to shut the engine down,

but believing that this is an undesirable course the method of attaching the second governor to a throttle valve is adopted.

To meet any sudden contingency either on the town circuit or elsewhere the fulcrum lever between the governor and the throttle valve is carried from a handle brought down to one of the engine beds. By raising this handle the throttle valve is at once closed; thus a means of shutting the engine down very quickly is provided.

TURNING MOMENT.

In driving alternators it is important that the turning moment throughout a revolution be very regular. With a given flywheel energy and number of cranks the higher the number of revolutions per minute the less the variation in speed during a revolution.

Again not only does higher speed give more regular angular velocity but it also reduces the necessity for extreme regularity. The truth of this will best be seen by taking comparative cases. Suppose an engine to be running at 80 revolutions per minute and driving an alternator. If now, the periodicity of the alternating current were 40 cycles per second it would be necessary to have 60 poles in the dynamo. Next take the case of an engine running at, say, 240 revolutions in which case 20 poles would be required for the same periodicity. Again, suppose that a phase displacement of 1 % is allowable, *i.e.*, the time occupied in making each complete alteration can vary 1 %. In the slow-speed wheel an alternation occupies 1/30th part of a revolution, and therefore the allowable angular variation is 1 % of 1/30th; or ·12 of 1°, whilst in the higher speed engine the alternation occupies 1/10th of a revolution, therefore the allowable variation is 1 % of 1/10th or ·36 of 1°, *i.e.*, practically three times as much as is permissible with the lower speed. We thus see that the higher speed not only of itself naturally tends to give more regular turning but that it also permits of a greater irregularity

in the speed. The two things combined therefore enable the high speed engine to give a much better turning moment with the same flywheel energy.

The problem of driving dynamos so as to give regularity of speed is very different from that of driving cotton mills, as in the case of the mill engine not only is the wheel on the engine a flywheel, but all pulleys, shafts and spindles throughout the mill are acting as extra flywheels, and are tending to give regularity in speed. In driving a dynamo there is no such external assistance as regards the flywheel problem.

In this paper I have endeavoured to outline the special features in connection with steam engine building which arise when engines are applied to the direct driving of large dynamos, and I have also described the methods which have been adopted in the Ferranti engine with a view to meeting these requirements. I have not dealt with any questions regarding designs of pistons, crossheads, connecting rods, and other parts where the requirements for driving dynamos hardly necessitate special designs. Suffice to say that we have adopted established designs or modifications of such which have seemed to us best suited for our purpose. The sectional drawing Plate 1 shows fairly clearly the general design of most of the parts.

DISCUSSION.

Mr. Alfred Saxon said, no doubt Messrs. Ferranti had had a very difficult problem to solve, and it seemed as though they were going to solve it in a satisfactory manner. No doubt they, like all engineers, had troubles and trials which were not described before the public. He thought that England might fairly congratulate herself that in high speed engine practice she was not behind any other country, but pretty well in the front. He was in general agreement with the opening state-

ment by which Mr. Day led up to some of his conclusions. It was true that if anybody went in for electrical engineering he must have plenty of capital.

As to the Corliss engine, Mr. Day did not give them any idea of how far the Corliss valve and trip gear were applicable, whether, for instance, 100 revolutions was the maximum speed at which that type could be worked satisfactorily. He had, however, perhaps given them sufficient information to enable them to form their own ideas.

He noticed that the Ferranti engines at the electricity station were 1,200HP, running at 160 revolutions per minute and 21in. stroke, which only gave, after all, a very low piston speed —560ft. per minute. If they compared these with the Musgrave engine at the opposite end, they found the latter running at 100 revolution, or perhaps rather less, but the stroke was 3ft. 6in., giving a piston speed of 700ft. per minute. In discussing the advantages of high speed engines, Mr. Day mentioned cheaper dynamos and engines, from which they inferred that the high speed engine at 160 revolutions was a cheaper engine than a Corliss. The cylinders in the Ferranti engine were 51in. dia., low pressure, and 27in. high pressure; but the Musgrave engine, if it were running at the same piston speed, viz., 700ft. per minute and turning 1,200HP, would have cylinders only 46in. low pressure, and 24½in. high pressure, so that some of the advantages claimed were more apparent than real. Then too, they had to take into account the extra economy of the Corliss engine. On Page 133, under the heading of valves, Mr. Day says "with a view to securing the economy of the slow speed Corliss engine, &c." This seems to be an admission that the Corliss type were the best for economy.

During his visit to Glasgow he heard a paper read on the Parson's steam turbine, published in *Engineering*, of September 6th, 1901, in which it was claimed that in a test that had been

made it had given results in steam consumption, at least, equal to the Sultzer engine, at Elberfeld. It seemed to him that if they must go in for reduction of dynamo costs, a rotary engine of the steam turbine kind was far better than any reciprocating type.

He would like to know whether Messrs. Ferranti had tested the mechanical efficiency of their engine.

Mr. R. M. Neilson remarked that as regards the Parsons turbine, whilst he did not by any means wish to disparage it, as good results had certainly been obtained from it, they must note that at Elberfeld superheated steam was used, and the high efficiency was obtained at overload. Of course that made a considerable difference in the result.

He would like to know whether the valveless pump they had seen that day on the Ferranti engine could be used for low speed engines. He took it that the delivery port must be open slightly before the suction port was closed. If that was so it might not work quite so well with a slow speed engine.

Mr. H. Pilling said that, as an insurance company's engineer, he would like to say a few words respecting "accessibility of parts."

There had been, in his opinion, an objectionable increase of late in the number of engines of the type made by Messrs. Allis and others, with the Corliss valves in an end box, which closes the end of the cylinder, and prevents easy access to the piston.

He had had the pleasure of inspecting the large engines made recently for the Glasgow Corporation Electric Station, and he noted that the large low pressure cylinders have end valve boxes which weigh many tons. This means great difficulty in gaining access to the piston.

It appeared to him that in the Ferranti engine also there is some difficulty as to accessibility.

Referring to the diagram (Plate 5), he took it that the *modus operandi* in examining any piston will be as follows :—First one has to remove the two steel casings on the left hand side, then strip off nearly all the lagging, and then break the joint. In the sectional elevation drawing they would further notice a feature of construction whereby the sliding face on which the valves work is the joint of the cylinder cover. Hence these joints come underneath the valve bonnets, which have to bear on two separate surfaces of metal—one belonging to the cylinder and one to the cover. Consequently, whenever the cylinder cover is removed, the valve bonnets have to come off both at the back and the front.

The question of accessibility is of vital importance. He thought it highly desirable that in the space of an hour it should be possible to inspect and examine the important parts of an engine. With the ordinary Corliss type of engine most men could get out any valve from the back or the front, replace it, bonnet and all, and make the connection again, in an hour, and the same period of time would be sufficient to remove the back or top cylinder cover, and examine the interior of the cylinder.

In making some tests of a set of engines at a large London electric lighting station, he found every one of the pistons and valves seriously leaking, and, although the engines were of similar size and type and by the same maker, the steam consumption which should not have exceeded 15lb. per IHP per hour came out as follows :—

STEAM PER IHP PER HOUR.

	Lbs.
Engine A	22·88
,, B	21·17
,, C	20·90
,, D	20·86
,, E	19·97
,, F	19·34
,, G	17·46

The variation in these results was simply due to varying rates of piston and valve leakage, as the subsequent steam tests with the covers off clearly showed.

This instance emphasises the importance of frequent inspection and testing of pistons, but can this be adequately given when Corliss or other valves are fitted in the ends of cylinders?

Furthermore, everyone knows the erratic behaviour of piston rings, which have an awkward knack of persisting to break up without well defined cause. Suppose such a thing happens in the large low pressure cylinders of the Glasgow engines, what will be the mental state of the engineer in charge?

The type of valve in the Ferranti engine is a very good one, but if in course of time the valves were placed at the side, thus giving easy access to the piston, he should think the firm were making a wise departure.

He was pleased to note the general success with which Messrs. Ferranti had attacked the difficult problem of producing a new and most necessary type of engine.

Mr. A. V. Coster considered that this debate would not be complete without reference to the advantages of gas engines for driving large dynamos. He had been a steam engineer for many years, but latterly had become interested in gas engine developements and, therefore, could examine this subject from both sides. It was disappointing to find that Mr. Day had entirely ignored the gas engine in his paper, and therefore he wished to remind them that, in this city, Messrs. Crossley Bros. had upon their list of engines for dynamo driving, engines giving 500 and 600BHP and were prepared to go to very much greater powers; on the continent also very large gas engines are at work driving some of the largest electrical plants made. He believed that in some quarters it was thought that the gas engine had inherent faults which made it not a good type of

motor for dynamo driving, all such difficulties had been overcome. In the neighbourhood of Manchester was a gas engine of 530IHP that could be started in 2½ minutes, it had been running over 50 days consecutively, day and night, without stopping, supplying electric light. Another engine had run over 136 days without a stop. He thought that in a few years time steam engine builders would find the gas engine coming into very close competition with them.

Great advances had been made in the production of cheap gas, and to-day they did not depend upon coal gas; at Northwich Mond gas could be supplied at 2d. per 1,000 cubic feet, and produced at a cost of ·67d. per 1,000 cubic feet; and his firm now made gas plants which could compete with anything that the Mond gas people could do.

It was interesting to note that one of the leading firms of steam engine makers, Messrs. Willans & Robinson, were, he believed, experimenting with a gas motor; was it because of fear that the trade might be diverted in the future?

The cost of power was the principal factor to be faced, and to-day good gas could be made from slack coal, say at 7/- per ton, and when put through the gas engine they could develop 1BHP at cost of under ½d. per hour.

The governing of a gas engine was also much simpler and cheaper, and the parts were more easily got at for attention and repair.

Some of them had no doubt seen the 600HP gas engine by Messrs. Cockerill, of Seraing, at the Paris Exhibition; many thousands of horse power were being supplied by that firm on the continent for dynamo driving.

In such a debate he personally thought it would have been inexcusable on the part of Manchester engineers if the gas engine, whose manufacture has added largely to the commercial prosperity of this city, had been overlooked.

Mr. G. JAMES WELLS said he knew many cases of steam engines running some months, night and day, and so far as he could see the only possible limit to the continuous running of an engine was wear and tear. As an instance he might mention the case* of a set of single acting engines which had run continuously, night and day, for 9 months, and were then shut down, but they could have run as long again if it had been necessary.

As to trip gear, his own opinion was that the limit of speed at which the satisfactory working of trip gear must be set was a matter of design of the details. If they had heavy gear, in which there was a large amount of inertia, the tripping must be at a lower rate than if the gear were lighter. It seemed to be a question of design and lightness, and he supposed the upper limit would be lower in the case of large engines, where, of necessity, the mass of the gear must be considerable.

There was an interesting point which was sometimes overlooked as regards the advantages of high speed engines over low speed engines in regular running. Mr. Raworth, in a paper read in Manchester the previous year, claimed that engines turned more steadily and regularly when the speed reached 200. It appeared to him that the reason for that particular experience was due, probably, to the fact that the proportion of the fly-wheel weight, and other rotating masses of the engines referred to by Mr. Raworth, was such that resulted in the particular result stated.

Take a single cylinder engine running at full load, then the diagram of the turning moment would be similar to that shown by the curve A, whilst on light load it would be reduced

* See the proceedings of the Institute of Civil Engineers, Vol. CIV., pp. 27 and 28. See also Mr. Robinson's paper, in which he mentions the case of an engine having run daily for five years, for 14 hours per day without being opened up, and then all that was necessary in the way of repairs and renewals, &c., was completed in 24 hours. See transactions of the Institute of Electrical Engineers, 1895.

to, say, the B curve with automatic expansion, or as shown by the C curve with a throttle governed engine.

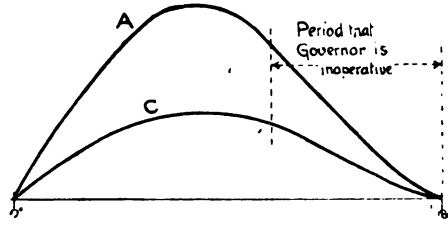

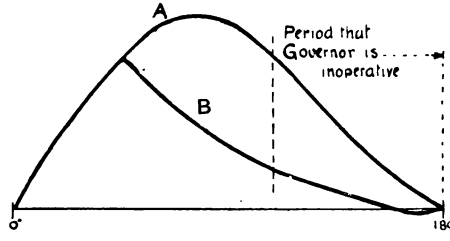

Now suppose from any given cause the whole load was thrown off very suddenly, then, until the governor has had time to re-adjust the supply of steam, there will be a turning moment excess of that required to maintain the speed of the engine measured by the intercepts between the curves A and B, or A and C as the case may be. This excess work done on the crank-pin could only be spent in accelerating the speed of the engine. It is evident that for any given type of engine this excess effort can be determined by comparison of indicator cards taken at full and light loads.

The acceleration of a mass (m) is proportional to the magnitude of the effective force (f), and the velocity generated will be proportional to the time during which the force continues to act. Thus it is obvious that in any engine, if the speed of revolution be doubled, the ultimate change of velocity will be

halved, assuming that the governor re-adjusts the steam supply not later than in the revolution succeeding that in which the change of revolution occurs.

In the past many engineers have been in the habit of designing their fly-wheels by a rule which allowed a fairly large co-efficient of fluctuation, and when the speed of revolution was increased from the usual 60 or 80 per minute up to 200 or more this gain of steadiness of speed was one of the beneficial results of the change, and no doubt was one of the factors which has contributed considerably to the success of the quick revolution engine.

He did not think that Mr. Saxon had quite appreciated the peculiar difficulties of high speed engine design, which might roughly, be said to vary as the square of the number of revolutions for equal powered engines.

Mr. A. HADLEY remarked that where a large supply of water was always available the best motive power for dynamo driving was water pure and simple, particularly where the dynamos were large; but in England the supply of water was not so superabundant that a discussion on that point would be of any great practical interest.

Mr. JOHN SCHOFIELD said the primary point was the cost of running power. If these high speed engines were economical they would be adaptable for manufacturing as well as electric driving. To his mind he had not seen a high speed engine which he considered at all economical. There were many mill engines running at 14lbs. and under of water, or 2lbs. and under of coal per HP. These were not running night and day or would show more economy. With coal at 10s. per ton, delivered in the fire-hole—they could get it lower in his own district—that meant $\frac{1}{10}$d. per IHP for coal. Where was the

high speed engine, gas engine, or oil engine that would equal that?

As to how long an engine would run, it was a question of keeping it in condition. In mills they had to repair when they could get the chance, but in the case of these high speed electric light engines there were generally duplicates, so that repairs could be easily effected. With such a precaution, and men capable of keeping it right, a mill engine would not be likely to break down, and would run continuously for long periods.

High speed engines were not comparable with medium speed engines for economy. High speed engines were simply adaptable for certain circumstances: they took up less room, and in that way were very convenient in manufactories and other places where they had to pay big ground rents.

The vertical type of mill engine when enclosed with forced lubrication can be considerably speeded up if slide valves with eccentrics and L legged airpumps are replaced by others of a rotatory kind.

With alternating movements balanced, an engine of medium speed can be made, which will meet with the requirements of the direct coupled dynamo plant.

Mr. Day, in replying to the discussion, said the piston speed of the Ferranti engines at the electric station was low because the engines were running at a lower speed than designed for. It was a question of quick delivery, and they had to get a dynamo quickly. They put the engine to the speed of the dynamo, but if it ran at the proper speed its piston speed would be quite up to that of the Musgrave engine.

As to the valves, they believed they were right in adopting grid valves for securing economy. They were not prepared to admit that Corliss valves would give better results than the

grid valves, as these latter were equally tight, and with them they got low clearance volumes.

The question of turbines he had not touched on, as it was outside the scope of his paper.

The mechanical efficiency of the engine appeared in the particulars of the Cardiff test, when the steam consumption per HP and K.W. were given. The relationship between the two gave the mechanical efficiency, which he believed was the highest ever recorded for a single phase alternator and engine.

He did not think the valveless pump was so suitable for slow speed engines as for high, and they had not tried it for engines below 130 to 140.

The question of accessibility raised by Mr. Pilling was undoubtedly a serious one, and when deciding the design of the engine they had to consider where to put the valves. Balancing the advantages of the alternative methods, they had decided to put them in the covers for reasons of economy. Seeing that they were dealing with large engines only, where cranage was necessary to get the cover off, whatever its design, it did not seem to be a serious difference to bring the crane along for say one ton or so instead of for half a ton.

Then there was the question of the drainage of the cylinders, which was more effectively secured with the valves in the covers, especially on the top side of the piston, as with the valves in the covers water would be thrown through the open exhaust port during the upstroke of the piston.

In the engines seen that day the valves could be as easily inspected as the Corliss. They had simply to take the back cover off.

In going round the works he had mentioned to several of the members that although the engine was of an entirely new type in many of its details, they had only one difficulty at all serious at the present time, and he was glad to have Mr. Pilling's

evidence that other makers had the same difficulty, namely, as to piston rings. Their breakage, he thought, was often due to collapse through external pressure. In a high speed engine the time between commencement of compression and full pressure being reached was so small that the steam had not time to leak behind the ring and put it in balance. Thus external pressure came on so suddenly that the piston ring collapsed.

The relay governing, to his mind, was the most interesting part of the engine. In Switzerland a very considerable degree of success had been obtained with relay governing on turbines. To a large extent they had adopted the same method on their steam engines, with results that gave them satisfaction.

When speaking of large dynamos he was referring to something beyond what gas engines of the size mentioned by Mr. Coster were capable of driving. When gas engines were to be found driving dynamos of 1,000HP, and upwards, they would come within the scope he had in view in writing his paper.

As to the question whether the Cardiff engine was still worked with the trip gear, he might say at once that it was not. Trip gear was not really a success at the speed referred to, and he had put in positive cam gear to suit that particular engine. The results given were obtained with that positive gear.

The question of limitation of speeds of trip gear was, as Mr. Wells pointed out, entirely one of mass. They had seen trip gear on engines at the station running about 96 revolutions; that was about the limit for an engine of that size. He had been informed that Musgraves would prefer a lower speed than that. He should place 100 as about the limit for a 2,000HP engine, whereas in their own engine they could run that size at about 180, or higher if desired. As to the question of acceleration, brought forward by Mr. Wells, he took it that he was referring to when the load was thrown off suddenly. He thought that was entirely a question of the amount of energy

stored in the fly-wheel and the rapidity of governing. The quicker the governor action the less the need of fly-wheel energy in excess of that required for regularity of angular velocity per revolution.

In reply to Mr. Schofield, he might mention that the Cardiff result worked out at 13·8 per IHP, which was within the figure quoted as so excellent for slow speed engines. That figure, too, was got after the engine had been in operation for eighteen months, and with no previous opportunity of regulating it or, in fact, doing anything to it.

The engines they saw to-day were used, one as a reserve for lighting load and the other on the traction load, and they both started at half-past four in the morning, and stopped at half-past twelve every night. That was a longer spell than they had with mill engines.

With regard to having spare engines, it might be an advantage to have a spare mill engine, but let them think of the enormous cost and the space occupied. On the other hand they were liable to considerable claims if they failed in the supply in an electric light station, and it became worth while to have an extra engine rather than run the risk of letting the supply fail. Then, too, in an electrical plant there was the dynamo as well as the engine, and that might require a "spare." Damage might arise through putting an excessive load on the dynamo, and by burning out armatures, &c. When they adopted high speeds they could afford to have spares.

The Chairman (Mr. Henry Webb), conveyed to Mr. Day, on behalf of the members, a hearty vote of thanks for his interesting paper.

Subsequently he stated that their President (Mr. Henry Hodgson), had been for some weeks very ill, and had been ordered by his medical advisers to take a long rest. He

was sorry not to be able to be present. He (Mr. Webb), wished them to empower him to instruct the Secretary to write to their President saying how sorry they were to miss him, and expressing their sympathy with him in his illness and hopes for his speedy recovery.

He wished also to propose a vote of thanks to Messrs. Ferranti (coupling with it the name of Mr. Day) and the Manchester Corporation, for the facilities they had afforded for the visits made that afternoon. If they had not learnt something in going through Messrs. Ferranti's works it was their own fault. What they had seen was very instructive, and they had had painstaking leaders who were anxious to give every information. He had been particularly struck with the fine work done in the meter department.

Mr. Day, in responding, said they had been delighted to show the members through the works.

Mr. Hadley (one of the directors of Messrs. Ferranti) also responded, stating that it had been a source of great pleasure to take the members round, and he had been struck with the intelligent interest taken by the members in things they had seen.

Plate 1.

RIVING LARGE DYNAMOS.

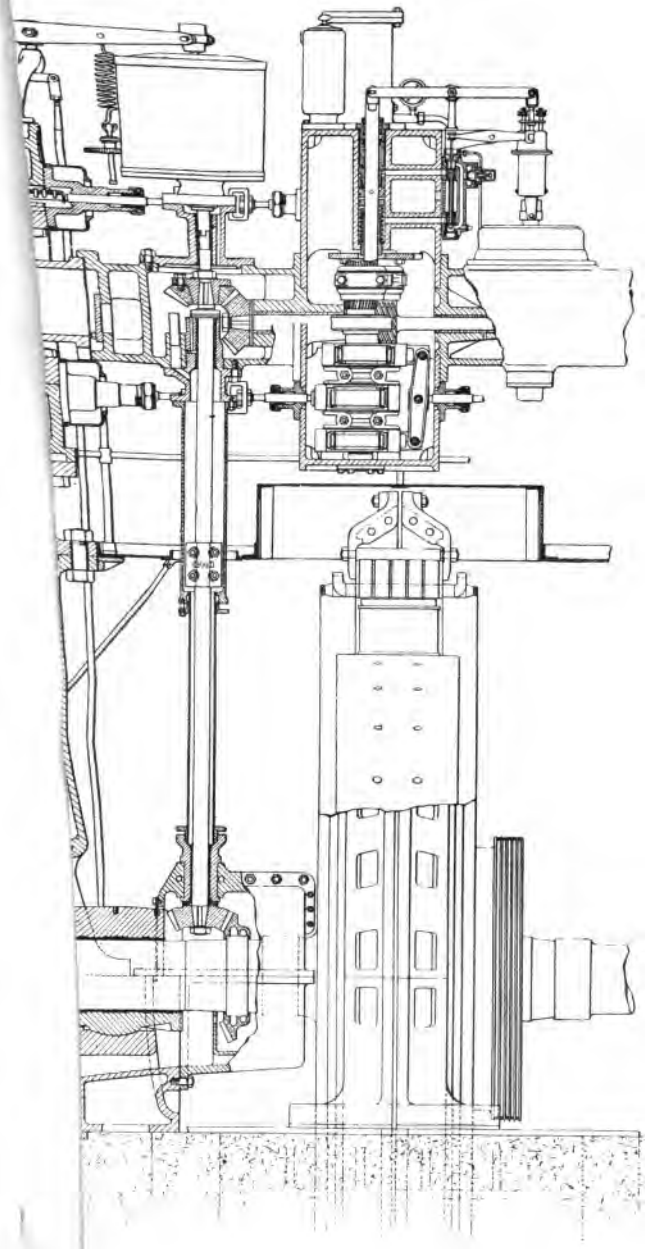

UNIV. OF MICH.

Plate 2.

RIVING LARGE DYNAMOS.

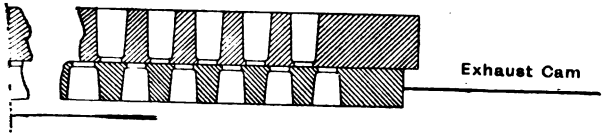

mencement of Stroke.

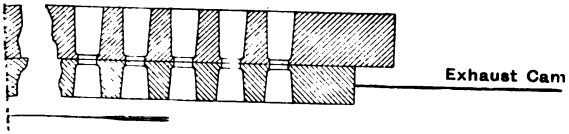

t Mid-Stroke.

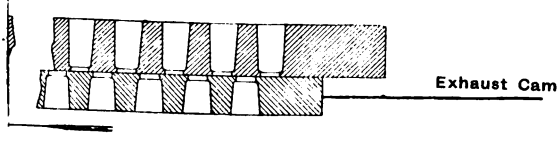

End of Stroke.

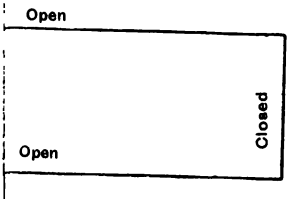

alve Movements for One Revolution of
d for Two Revolutions of Engine.

UNIV. OF MICH.

RIVING LARGE DYNAMOS.

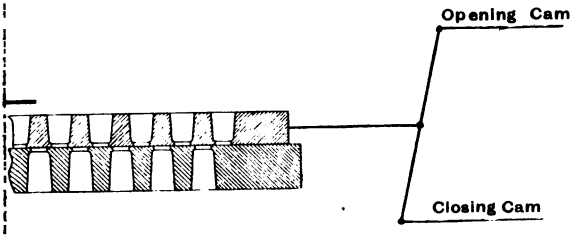

tion—Ports Closed.

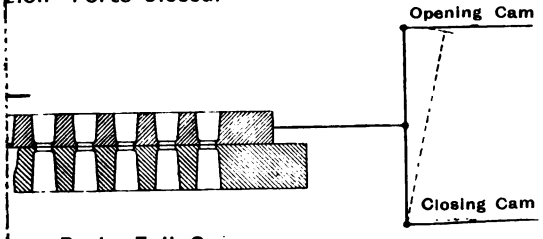

on—Ports Full Open

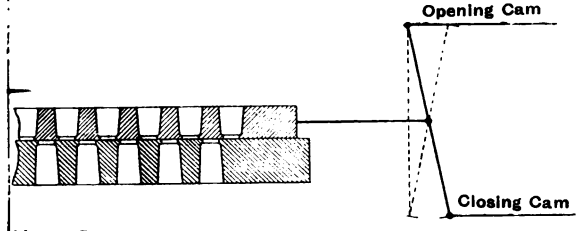

tion--Ports Closed.

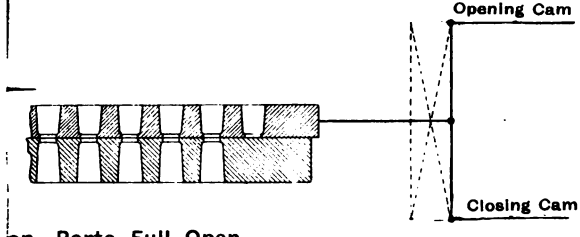

on—Ports Full Open.

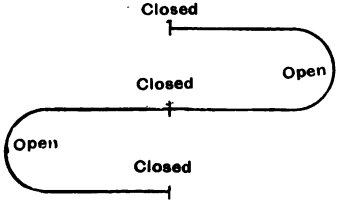

r Steam Valve Movements for one Revolution of Shaft and for Two Revolutions of Engine.

UNIVERSITY OF

Plate 4.

RIVING LARGE DYNAMOS.

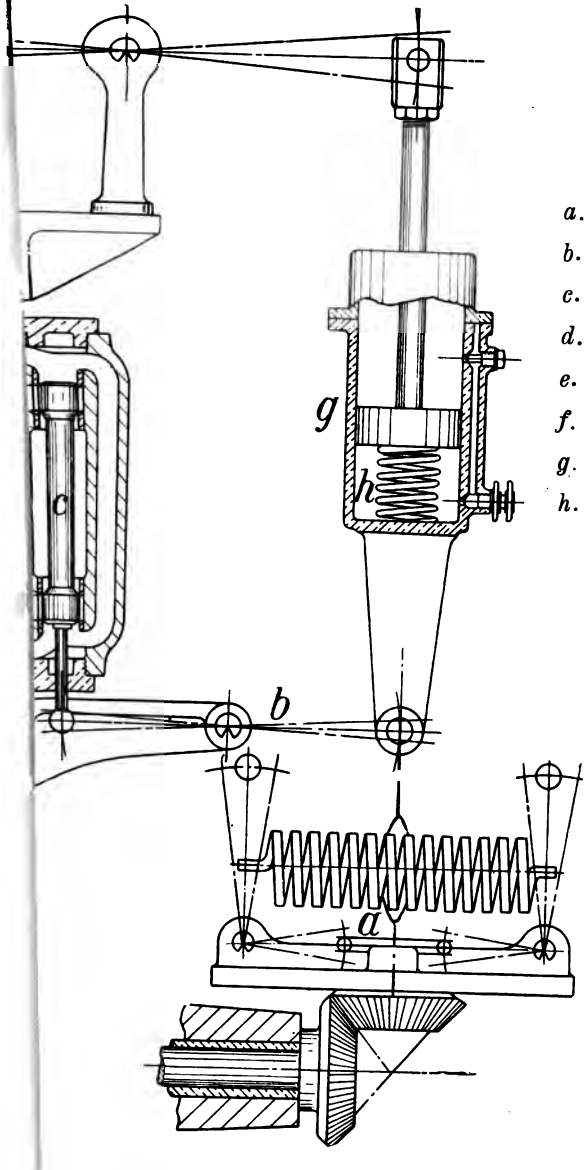

a. *Governor.*
b. *Governor Lever.*
c. *Controlling Valve.*
d. *Relay Piston.*
e. *Spiral.*
f. *Outside Lever.*
g. *Dashpot.*
h. *Dashpot Spring.*

UNIV. OF MICH.

Plate 5.

R DRIVING LARGE DYNAMOS.

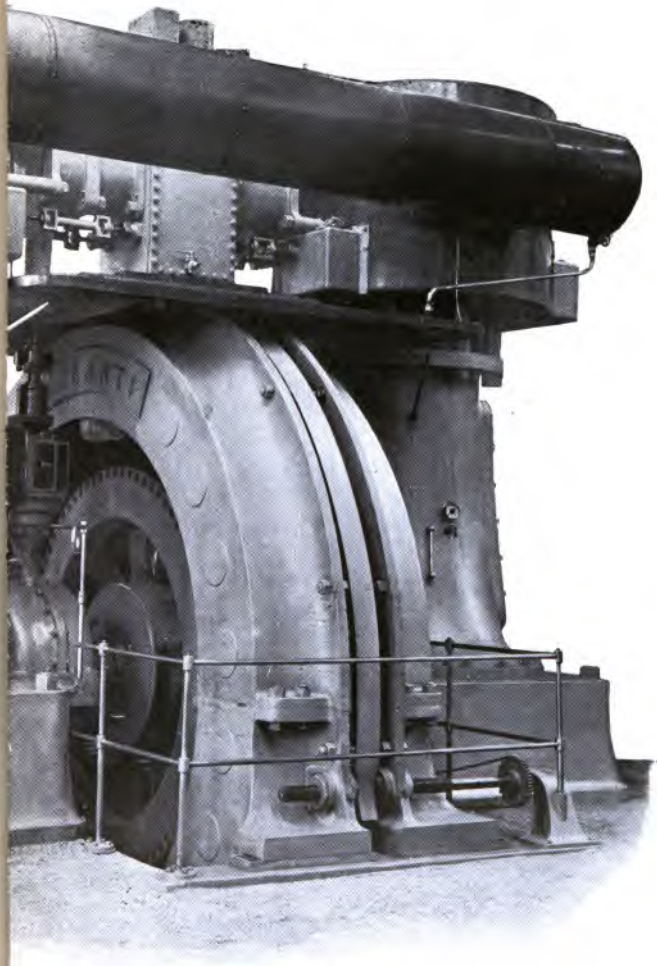

AMERICAN *v.* ENGLISH METHODS OF CONDUCTING ENGINEERING ESTABLISHMENTS.

READ SATURDAY, 26TH OCTOBER, 1901,

BY

MR. EDWARD WOOD,

SALFORD.

There has been so much talk and correspondence in the newspapers during the last few months on the subject of American competition that I think no apology is necessary on my part for bringing this matter before the notice of the Manchester Association of Engineers, in the hope that by a discussion of the question we may all discover something that may be useful to us as engineers.

In view of the fact that so many businesses and trades all over the world are controlled by the Americans, it is satisfactory to know that the best steamers sailing between Liverpool and New York are British make, and there is a sense of comfort and satisfaction when standing on board such a boat as the S.S. *Oceanic*, to know that not only was she built on this side of the Atlantic, but that she is owned by British capitalists. We often talk about the magnitude of the American concerns and the height of the buildings over there, and it is interesting to note that the boat referred to is 700ft. long, 68ft. wide, and 68ft. from the deck to the keel. If she were placed exactly opposite the main entrance to the Manchester Town Hall she would extend about 160ft. on either side of the building, and

it would be almost possible to move the hands of the clock from the top of the funnel.

In a short paper like this it is impossible to do more than hint at the many things that strike one immediately on arrival in America. Perhaps the first is what we might call the natural conditions of the country. If you glance at the map you will notice that New York is about the same latitude as Italy, being 41 degrees north of the equator. The atmosphere is much lighter, there is an absence of fogs, and although the extreme heat and cold are much greater than in England, still it is considered that the natural atmospheric conditions of the country account to a great extent for the energy and go which is so apparent there.

The trams go at a terrific speed, and in the large cities run all through the night; and the people have got into such a way of abbreviating everything that an advertisement is called an "ad.," the Elevated Railway is called the "El.," and the word street is frequently ignored, viz.:—in Philadelphia where many of the streets are called after the names of trees, they speak of Larch, Walnut, Pine, Chesnut, etc. It would seem strange to us in Manchester if a lady from Didsbury were to tell the conductor of a tram here to stop at Cross, or Oxford, or Peter, or Market.

The railway trains, which are elaborately fitted up, go about the same speed as our expresses, and the famous Pennsylvania Limited consists of drawing-room car, dining-room cars, a library, smoke-room, barber's shop, a bathroom, and an observation car at the end of the train.

The distances in America are, of course, very much greater than in the British Isles, and almost everybody travelling make their long journeys by night, and one of the chiefs of the Steel Corporation, on looking over my programme of the towns I proposed to visit, was horrified at the fact that I intended to

spend my nights at the different hotels. "Why man," said he, "you can cover twice the ground if you use the sleepers! whatever are you doing wasting your time at the hotels?" I was very glad I did not follow his advice, for the American hotels, which are open all through the night, though very expensive, are most comfortable and most elaborately fitted up. You may have your letters sent to any hotel whether you are staying there or not. The elevators are of the latest and most up-to-date pattern, and in many cases you never see the staircase of the building at all; and there is a point here that we may, I think, copy with advantage, that is, after once having registered in the visitors' book you are known by your full name. You are not a number, and this appeals to you very much when you are 3,000 to 4,000 miles from home.

PREPARATION OF BOYS.

In dealing with the subject of American versus English methods of conducting engineering establishments, I should like, in the first place, to refer to the preparation and education of boys.

There is a danger in England of our taking our boys from school too early in their lives. What is wanted is a more thorough grounding in education and a better knowledge of elementary science. Our member, Mr. Hans Renold, said in his letter to the *Manchester Guardian* some time ago, that in one works in Philadelphia he called at, out of 29 men in the Commercial and Drawing offices, 9 were graduates of the highest American Technical Colleges, 10 came from manual training schools, and 10 came from the high school at which the students must stay till they are 18. Now in England after a boy has passed the 6th standard he starts work, very often at 13 or 14 years of age, and many boys, whose parents can well afford to keep them longer at school, start work at 15 or 16.

The Chairman of the Ebbw Vale Co., at their last meeting, spoke about the importance of cultivating Technical Education, and everywhere in Great Britain this is being fully recognised. Manchester and Salford, I am glad to say, have proved themselves fully alive to their responsibilities in this matter, and have now two of the best and most fully equipped technical schools in the world.

A professor at one of the institutes in the United States says:—"The United States should soon rank first as a commercial nation, with its almost limitless supply of raw material. Moreover, the United States possesses another great advantage, a great ability to hustle, never satisfied to leave well-enough alone, trying to save a little labour here and a little there; always scheming to solve some hitherto unsolvable mechanical problem; restless, and untiring always."

Here is a point where John Bull may surely be second to none. Let him get up and hum himself, as we say; shake the dry dust out of his bones, and offer some inducements for new ideas.

It is new ideas that are wanted, and the young men should be trained to realise that original ideas are the most valuable assets they can possess, the ability to put them into effect being a close second.

Long apprenticeships are not necessary to success in any trade, and it is better for a boy to start work with a good general education, and with the knowledge that he must think, than that he should commence directly he is able to run errands or copy a letter. A boy will make a better blacksmith and a better citizen who starts at the age of 16 with a sound general knowledge, than one who commences work at 13 and who can with difficulty get through an easy sum in multiplication or long division.

OBJECTS AIMED AT BY ENGLISH AND AMERICANS.

The objects aimed at by men on both sides of the Atlantic are slightly different. The Englishman's aim as a rule seems to be to secure a competence, to provide for old age, to have enough to start his children in life, and to make suitable provision for them after his death. The race for wealth is not so keen in England as in America, and this explains the reason why so many on this side are always ready to offer to serve their fellows without fee or reward in Parliament, on the Town Councils, on the School Boards, and in the thousand and one philanthrophic institutions. The Englishman who is wise cultivates a hobby such as music, literature, sport, or science, and when he retires from work his time is fully occupied and he does not find it hang heavily on his hands.

In America the one object held in view by the average man, as far as I have been able to discover, is to make dollars, and when he has made dollars, to make more.

He starts early in the morning, he hurries through his meals, he hustles through the day, he works hard and he thinks hard. He is polite, generous and kind, but his one object is to make money, and he is now beginning to find out that he must take more leisure, he must leave work earlier in the day, and he must go in for golf and other sports if only for his health's sake.

COMMERCIAL DEPARTMENT.

On arrival at an engineering works in America you are invited to enter and register your name in the book provided for that purpose, you are shown all over the works, the methods of working are explained to you, and new inventions pointed out. The system of showing strangers over works and business houses does not prevail in 2 per cent. of commercial concerns on this side. Yet the Americans are distinctly of opinion that their method undoubtedly pays them from a business point of view.

I called at a firm of constructional engineers in New York, and was immediately shown into the private office of one of the partners; and, after asking him if he would let me see some of their work, he replied, "With the greatest pleasure in the world. Now, let me see, you will like to see some of our 20 and 30 storey buildings, all right." Calling one of his chief assistants he handed me over to him, and he spent the whole day showing and describing to me their work, their customs, wages paid, and their manner of conducting business. Let me give you my experience on one occasion in Lancashire. A firm of tool makers wrote to my firm offering a new machine which they were anxious to sell to us. I wrote back saying that before buying I should like to see it at work, and after a few days' delay the makers wrote saying that they had two machines working at two bridge works like my own, but the owners regretted their inability to let me see them as I was a competitor of theirs.

One of the most striking features of all the engineering works in America is the fact that quite young men are in positions of importance and trust.

In one large works I called at, where about 5,000 men are employed, a man was pointed out to me as the chief electrician. "Why," I said "he is only a boy!" "Boy indeed," said my friend, "he is 24 years old."

Mr. Cory, the chief at Carnegie's, at Pittsburg, is 40 years old, and Mr. Charles Schwab, the president of the United States Steel Corporation, is only 39. He is approachable, smart, well dressed and friendly. He calls you by your name as if he had known you for years. He has fought his way up, is very popular at the works and a great favourite with the men, who speak of him as "Charlie Schwab." Mr. Schwab is a good leader and was highly thought of by all the men I met, no one

seeming envious of the high position and enormous salary which he has.

Another system that prevails in American establishments is to duplicate, or have understudies for all important positions. I met a man who had been representing a firm of American engineers at the Paris Exhibition, and who was just on the point of setting out for Australia to open a branch there, and on my asking him what would happen to his work if he were taken ill or incapacitated he replied "there are a dozen men at our office who could take up my work at 24 hours' notice."

Some people think that the reason why America is forging ahead in front of England arises from the fact that we are so tied to old traditions and methods of working; many people here being of opinion that what was good enough for our fathers and grandfathers is quite good enough for us. A writer to the *British Weekly*, however, who has evidently thought out the question carefully, says the American does not expect to work in the prescribed groove sanctioned by experiences of the last generation. Some men he pays simply to think for him. If they can mature one or two money making ideas they are worth big salaries. He does not push a man on one side because he does not accomplish a definite amount of detail per hour. He leaves certain of his staff to their own devices and simply watches and waits for results.

In America the man of business is always on the look out for some new scheme which will save dollars or make dollars for him, and when a new idea is presented to him he at once tries to discover the possibility of its success. It is stated by some, but I do not agree with them, that the first thing done by a man of business in England when a new idea is presented to him, is to consider every possible disadvantage which may occur if he should adopt it.

If you present to an American a new typewriter quicker and better than his old one, even although it makes a noise like Niagara, he would take it without the least hesitation, knowing perfectly well that he would get used to Niagara, and that in the long run he would profit by the exchange.

The enterprise of the American firms is now being recognised all over the world. Take for example—an American company has offered to equip for the Wolverhampton Corporation eleven miles of electric tramway, and to give them twelve months' free trial of the work. The work is going on, and if the system is not a success the Company have agreed to take up the lines free of charge. It is not surprising to learn that the Corporation have accepted the offer.

I met a man at Boston who was going a journey of 1,000 miles at three hours notice. He had arranged the appointment by telephone and he wanted to have just half-an-hour's conversation with his customer with regard to a slight misunderstanding which had occurred, and which he said could be more easily dealt with verbally than by correspondence.

The Americans attribute a great deal of their success to their means of transit, and they are very proud of their railways and their locomotives, and I think very justly, in many cases, of their railway stations. The railway station at Boston has 28 tracks and a train can come in at No. 1 track, discharge its passengers, and continue by an underground semi-circle below the station buildings, and come out at any track from 20 to 28.

The goods trains in America are much heavier and the trucks much larger than in England. Many trains consist of 50 waggons, and these are capable of carrying 30 tons each. They run to schedule time and the rates are low. In England waggons to carry 10 tons seem to be the maximum, while the rates are high.

Water carriage, as everyone knows, is low, and when England and America are competing for the markets of Europe, America has the advantage, for the rates of freight from the producing centres in America to these markets are little if any more than from towns like Birmingham to London.

On the other hand it is only fair to state while talking about railway travelling, that statistics prove that 1 passenger is killed in every 2½ millions in America, 1 in 19 millions in France, and 1 only is killed for every 28 millions in Great Britain.

It is the custom for the engineers in America to make everything they possibly can to their own standard or template. If they get an enquiry for something not in their catalogue they refer you to some other manufacturers. They make a great point of having very good men as inspectors, whose duty it is to pass machinery and work of every description before it is sent off, and the shipping department will not allow anything to leave the works till the inspector has signed a certificate that all is right.

Telephones are fixed in every office and department, and from first to last system reigns supreme.

DRAWING OFFICE AND DESIGNING DEPARTMENT.

The drawing office is one of the departments in both English and American workshops which should receive the most careful attention of the firm. Mr. Henry Webb seems to have fully grasped this when he stated in his paper to this Society three years ago what every engineer now fully recognises, viz.:—that draughtsmen should remember that a drawing should be complete, for a drawing that requires any explanation is little or no use. Drawings for the works should be so clear that they could be sent 1,000 miles away and skilled men could execute the work at that distance just as well as the men who could confer with the person who made the drawing.

WORKSHOPS.

In a modern engineering works such as the Pencoyd Works in Philadelphia (where the Atbara Bridge was made, and which created so great a sensation), the plan adopted is to handle the material as few times as possible.

Here the material literally goes in at one end as pig-iron, and, after passing through the various stages and departments, comes out at the other end a complete bridge, marked and ready for erection. Here they have steam, electricity, pneumatic, and hydraulic power.

Though the output has been very much increased during the past few years the number of men has decreased, machinery taking the place of hand labour. Every possible new machine or method that can be found to save labour is at once seized, regardless of first cost.

The wages of the skilled workman in America is at least twice as high as that paid in England or Scotland, and piece-work seems to be very general. The cost of living, however, is so much higher in America, that this, in the opinion of many workmen, almost balances the extra amount received in wages.

The houses for the workpeople, which are chiefly made of wood, are nothing like as good as those in this country, and house rents are very high.

All nationalities are found in almost every large engineering works, and the workmen readily acknowledge that it is the dollars that fetch them, coupled with the fact that there are less restrictions in America than in Europe.

Considering the great outcry there was some years ago against the introduction of machinery, it is a singular fact that every year there migrate from England, a country with little machinery compared to the United States of America which is a country full of machinery, thousands of skilled mechanics, and it is a curious fact that here, where we do so much by hand, our

workmen receive much lower wages than they do after a few months from landing on the other side of the Atlantic. It is stated by one writer, that high up, occupying the best posts in the American factories, you find Englishmen and Scotsmen who left home because they were not content with the dead level of wages thrust on them by trades unions, or with the lack of opportunity given them by their employers.

Mr. Schwab, of the United States Steel Trust, told me, (and his opinion must carry much weight when we consider that he is at the head of a corporation which turns out 10 to 11 million of tons of steel per annum) that we were a little too slow in England, that we were too much hampered by old traditions, and that our workpeople were not yet educated to the fact that more and better machinery meant more money to the master and the man. Mr. Schwab also said that although the Steel Trust was just about to face a great industrial struggle, which has since then been satisfactorily settled, still it was well known and fully recognised that there are less restrictions as to piecework, etc., in America than in England. They do not say in America you may have piecework in one shop, and in another you may not, the consequence being that each workman acts on his own initiative, and turns out as much work and minds as many machines as he can, well knowing that the more he does the larger will be his wages.

Masters and foremen in England are constantly coming across cases of workmen who positively refuse to work overtime, or even a full week, saying frequently "Thirty-five shillings a week is quite enough for me, why should I bother about working 53 hours, to say nothing about working overtime, even if it would make my money 40/- to 45/- per week?" This state of things, as far as I could find out, is almost unknown in America.

A writer to the *Daily Mail* says that the reason why England is being left behind by American manufacturers is the fact that

the British manufacturer regards the inventor as an enemy who is trying to upset his business, while the American is always looking out for something to enable him to get ahead of his trade rival. Mr. Councillor A. H. Scott speaks of calling at a business house in America where a box was kept into which might be put written communications from the workpeople, and he was assured by one of the partners that some of the suggestions had contributed not a little to making the undertaking the largest of its kind in the world.

In many engineering works in America they work double shifts, night and day. The men start and stop to the minute, are satisfied with less holidays, and work slightly longer hours than over here; they have good dining rooms for the workmen, and the shops are light, clean and airy.

In many works wash-up rooms are provided for the men, with long troughs filled with warm water, which is used by the men directly they leave work. It makes the men respect themselves, and as a rule men who do so will turn out better work and become better citizens. As far as I could see there seems to be no sentiment of any sort in business anywhere in America, and in almost every case quite young men are in charge of departments. I learned that as workmen get old and are not equal to the high requirements of the firm, they are simply transferred to an easier task and not discharged except for some serious offence.

I should like to call the attention of this meeting to the speed at which work is carried on in America. I do not intend to say anything about locomotives, engines or electrical machinery, or tools, many men here know more than I could possibly say on this point, but I want to mention one or two cases of the speed at which buildings are erected.

The Westinghouse Company at Pittsburg commenced a new workshop 1,270 feet long by 66 feet wide, on August 1st, 1900,

and when I called there on April 21st, 1901, *i.e.*, nine months in all, the work was complete, the floors were laid and the electric travelling cranes working.

The A. & P. Roberts Co., Pencoyd Works, Philadelphia, to which I have already referred, erected the steelwork in the National Exposition of Philadelphia in 1899 in 50 days, and the total weight of steel used was nearly 1,500 tons. This same firm, which is a branch of the American Bridge Co., and which is part of the Steel Trust, are exceedingly proud of the way in which they made and erected the Atbara Bridge for our Government in Egypt. They said it was not one of their standard designs, but everything was special, the strains and designs were worked out in six days, the material rolled in their own works during the next six days, and the total weight in the bridge was about 650 tons.

The New York Stock Exchange, which was really a very fine building, was found to be too small for present purposes, and on May 1st this year they commenced to "tear" it down, or as we should describe it, pull it down, and the contract states that the new Exchange, a much larger building of great architectural beauty and of much larger proportions, will be ready by May 1st, 1902, *i.e.*, in twelve months; and I was assured that there was little or no anxiety on the part of the committee or subscribers as to whether this date would be kept, as the contractor who has the work in hand had done much larger buildings in less time. The building goes on night and day. Inspectors from the Corporation are always stationed at the work, and nothing is spared in the way of money and machinery.

My impression was, comparing Englishmen with Americans, that while the wages all round are much higher in America, still very much more is required of masters and men,

the pressure is greater, and, to use a technical term, the "voltage" is much higher.

Lord George Hamilton said a short time ago, speaking about some orders going out of England: "You seem to think that orders have gone abroad because those who gave them did not understand their business. I wish that was so. The competition we have to face is founded on something much more formidable and substantial. Chemical research, concentration of capital, thorough technical education, improved industrial organisation, have made in recent years greater advance in America than here. It is with the product of these combinations, and not with the assumed stupidity of Indian officials, that the British engineer has to deal."

One thing that struck me more forcibly than anything else on my return to England was the fact that all thinking men on this side now seem fully to realise and recognise that we must look well to our laurels if we are to remain the first commercial country in the world. We fully see and understand now, that unless we are careful we shall be second in the race for commercial supremacy, and this fact alone is in my opinion one of the most gratifying signs of the times.

The young men turned out of our Universities, colleges and high schools are the finest in the world, and if they will only realise that if they are to succeed in life they must put into their work the perseverance, method and punctuality which is so plainly visible in the American houses, then we as a nation need not have much fear of the ultimate results.

A writer to the papers recently said that the American invasion was proving a blessing in disguise, saving us from the stagnation into which our usual prejudice and long years of "go as you please" have led us. Englishmen are admittedly slow to move, but we are now stirring, and the thanks are due to our American cousins for having awakened the sleeping lion.

If the British workman and the British master will put forth their strength and intelligence to assist them, regeneration will come fast.

We have any number of examples of smart things being done in England. One man in a high position in London, on board our steamer, had left at two hours' notice for a three weeks' business tour in the States, and after all you frequently hear from the Americans themselves the statement that they admire and will have to imitate the quiet repose of the Englishman, and they envy him, his horses, his dogs and his home life. They certainly state that America is not the place to live in if you wish to make old bones.

There is a little friendly rivalry between Manchester and Salford at present with regard to the tram service, and you frequently hear of contests between Manchester and Liverpool, Lancashire and Yorkshire, and North versus South. All these serve a useful purpose and are good in their way, and help us to face the great struggle which commenced at the end of the 19th Century and is now being fought in the 20th Century for the commercial supremacy of the world.

I certainly recommend all of you who possibly can manage it to go to America and see for yourselves the manners, customs aud habits of the engineers there. It will do you good and although on your return you will probably "buck up" a little you will come back more proud than ever of the old country.

I am very jealous of the honour of old England; I started an Englishman and I came back a Britisher, and I am convinced that if we only make up our minds, shake off old customs and habits, if master and man work together with a determination to succeed, succeed we shall, and we shall still be able to hold our own with our cousins across the water.

DISCUSSION.

The CHAIRMAN (Mr. T. Ashbury), in opening the proceedings said while they were feeling the effects of American competition it behoved them to look the facts in the face, and endeavour to tackle the problems that lay before them, so that they might maintain the supremacy they had hitherto enjoyed. They were not blind to the fact that changes must come, and while many of them believed the wisest course was to have the maximum of benefit with the minimum of change, they were quite open to take lessons from those whose experience might have been wider than their own, and whose opportunities for obtaining special knowledge had been greater.

Mr. E. G. CONSTANTINE said it was one of the best papers to which he had ever had the pleasure of listening, and gave evidence that Mr. Wood had made the best use of his time when in America. With regard to the age at which boys should commence work, his own opinion was that 15 or 16 was the proper age for the average boy, because, although in some cases a short apprenticeship might serve, it would take the average youth a good five years to learn a trade thoroughly. A good deal might be said in favour of boys starting at that age, as compared with 17 or 18, but to send a lad of 13 or 14 to learn engineering was a great mistake. No doubt the race for wealth in America constituted a difference between that country and our own, and accounted largely for the keen activity displayed by the Americans. Comment had been made on the number of Britishers occupying important positions. One was led to the conclusion that the success of America was largely due to their drawing a great proportion of the best talent from this country, and why should that be so? Mr. Wood hinted at

the cause—that there was not sufficient encouragement given to brains by our own employers, and this led to men going over to America where they were better appreciated and remunerated. They heard on all hands, in this country, that they wanted education; so they did, but that education was not altogether the education received at the technical colleges, although these were doing a great and good work. They wanted education for the top ranks—the employers—as well as the lower and intermediate ranks.

Mr. James Vose deprecated the practice of taking boys at too early an age. They could not have a continual supply of boys at a mere pittance to do such work as was usually entrusted to them, without as it were degrading the beginnings of their workmen. If they took boys at 15 and paid them half the present rate of wages and at 18 or 19 put them on merit, and if they proved worthy to receive journeymen's wages let them have it, the parent would be paid for making the sacrifice and the non-stayers would be weeded out.

As regards education, several of those who attended the technical classes that he attended, 14 or 15 years ago, were now in India, Russia, the United States, and other competing countries; getting better salaries than their class-mates who stayed at home. They had been driven abroad owing to employers here being indifferent to their claims.

With respect to the American system of "paying men to think" for them, he came across the father-in-law of one of their members in the States, occupying the post of "foundry inventor," who did nothing but remain about the foundry and make any suggestions which he thought would facilitate the carrying out of operations. Where was the foundry in England where a mechanic was supposed to be necessary to look about and see what he could suggest? As to houses for workmen not

being as good in America as here, he had seen some illustrations in the *American Machinist* which gave rather a different impression, though, of course, circumstances might differ according to the district. With reference to piecework, there had been a settlement in this country which could be taken advantage of, and he thought they should press it home.

Mr. William H. Cook said it had been a pleasure to listen to Mr. Wood's racy paper but there were several points to which he must take exception. He had not had an opportunity to see the system of Technical education in America, but from 25 years practical experience of Technical education in England, and from observations made in several of the Continental countries, he had no hesitatation in saying that there were no finer opportunities in any place in the world than those possessed by the lads of England at the present time to obtain a thoroughly sound technical education under the best of teachers and at a very small cost.

If the opportunities were not taken full advantage of the fault lay in two things.

1st.—There was not sufficient compulsion exercised by parents to see that their children attended the classes and studied in a proper manner; nor did they take sufficient interest in their progress. Some speakers had said the employers were to blame, he did not see this.

What the employers should do, and what was done at any rate by his firm, was to keep an eye on the bright lads, and if there were any chance give them a push up, and if any employer had a little spare money he might give it for a good prize to form an incentive for the students to study.

2nd.—The education of the district was generally, speaking, in the hands of those who were not practical and did not understand its needs. To obtain the best results for the very

large amount of money expended, the classes should be regularly inspected by a board of experts, paid or otherwise, men who knew the requirments of the district.

Much has been said by Mr. Wood and other speakers about the youth of the men occupying responsible positions in America; this might be all right, but his experience was that youth did not always pay; for many jobs, the experience that came only with age was necessary.

It had been said by some speakers that the fact mentioned by Mr. Wood that almost all the responsible positions were held by Englishmen or Scotchman was to the discredit of England because she had not given them proper opportunities. He did not think so; but rather that it was to her honour she could produce more brains than she could employ, and could send men to such a mighty smart place as America to "hustle" themselves into all the positions worth having.

The remarks of Mr. Wood about visiting other works were not borne out by his (the speakers) experience, as he had found no difficulty whatever in getting permission wherever desired.

The question of piecework was entirely in the hands of the employers, and he would give his workmen the credit—they numbered a couple of thousand—that with very few exceptions he had found them very reasonable to deal with. There was one thing in the American system of working which might well be copied, that was to make standard sizes of machines or tools, make them in quantities, and in duplicate, and pass any orders which were not to standard.

From his experience it paid in the long run to do this, as the machines when made say in batches of six could be produced for at least 30% less than when made singly.

Mr. A. P. Loscher said, as regards evening schools and the opportunities there given at the present time in say, Manchester

or London, he agreed that they were the finest in the world, but the ordinary school education left very much to be desired, and lads on leaving did not seem to have the same sense of responsibility, in connection with the trade or business they were learning, as was found amongst many of those in Germany. As Englishmen began to see the advances made by other nations in conducting engineering establishments, and the way in which progress was to be secured, they would no doubt take advantage of what they had learned, so that they might succeed in maintaining their position.

Mr. James Saxon observed that in England they had made splendid progress during the last few years in those few things in which they were behind. With regard to the preparation of boys, however, it still remained a fact that no boys but those who were sons of parents in fair circumstances could have the technical education outside the workshop, which was desirable, and which, he expected, the Americans had. No one could enter the technical school for the three years' course under the age of 15, and that meant that a lad could not complete the course till he was nearly 19. Now, it needed some influence to get a young man of 19, even with that amount of technical training, into a workshop. And that was a difficulty which would have to be faced and overcome by the generosity and greater open-mindedness on the part of employers generally. Then, again, the ordinary workman with an average wage could not afford to keep his boy the requisite time away from work—thus losing his wages—and to pay the necessary fees. When it became possible in this country for a working man to keep his boy at the technical school till the age of 18 or 19, without loss of wages and the payment of fees, there was some hope of progress in that direction. If that were possible they could do with a much shorter apprenticeship, as a lad coming into the shop

with a good technical training and scientific knowledge could learn the trade in a much shorter time and to much greater effect.

He was glad Mr. Wood did not, altogether, approve of the American ideal of the employer. There was something besides dollars to live for, and no doubt many of the Americans had found, when they had acquired the dollars and ruined their health, that one thing was a very poor compensation for the other.

With regard to the American custom of showing strangers over their works, no doubt the backwardness of English employers in that respect was being overcome, to a large extent, by the influence of associations like their own. The views of many of their members had, no doubt, greatly altered on that point, and visits to works had recently taken place which some years ago would have been impossible. It was to be noted in this connection that, whilst taking competing visitors through their works they were showing the visitor something to their advantage, they were generally able to get some information from them in return which repaid them.

As to the claims of young men to advancement, "youth" seemed to be a prevailing fashion at the present time, but the discretion and experience that came with years still meant a good deal in the business world and would continue to do so. Mr. Wood had said the Americans had not much sentiment, but still he mentioned something that indicated that this was not altogether wanting. He said they kept the old people and put them on easier jobs. In many cases in this country that was not being done.

On the question of drawing offices, there was no doubt the drawing office in the past had been relegated to a "back seat," but now they, as well as the Americans, were beginning to recognise its importance, and to see that a drawing should be

made and sent into the shop with every particular upon it, so that the workman, if he possessed the technical knowledge, could read the drawing properly without constantly consulting the foreman. The difficulty was that our workmen did not possess that technical knowledge and, consequently, more supervision was necessary.

Mr. WALTER YATES said, in visiting America he was struck with the great energy and go of the people, and the readiness with which even competitors were shown through the works. The way in which the latest labour saving machinery was adopted, even if only slightly better than the old, was also noteworthy. Then, too, a man could get a patent, which had something substantial about it when he had got it, at a cheaper rate in America than here. They also went into the question of shop costs very minutely, and that appeared to be one reason why they got more work out of the men, as if they found that a man was not doing his full duty they could hustle him round faster.

Mr. HANS RENOLD supported Mr. Woods recommendation that, all who could make it convenient should go over to America and see for themselves what was being done there. Some of the very best men who were holding the finest positions in America were either emigrated Britishers or the first descendants of the earlier British emigrants. When discussing the question of American competition one must always keep in mind the fact that the United States were thirty times as large as Great Britain, and this whole large country was open to the Americans to exchange their goods without let or hindrance, which was no small advantage. The enormous resources of the United States in woods, minerals, &c., seemed to create in the people an enormous amount of extra energy and determination.

With respect to technical education and apprentices, he had once had an opportunity of addressing the apprentices of the Brown & Sharp Manufacturing Company, about 150 in number. None of them were allowed to start their apprenticeship under the age of 17, and had to give proof of having passed through a higher grade or grammar school. This firm had a special man appointed to look after the interests of these apprentices and to see that the foremen gave them such work on which they could learn something. This apprentices' friend also got up a book containing elementary shop points which apprentices ought to know. The readiness with which visitors were admitted to American works was remarkable. During his last visit to Brown & Sharpe's he found the superintendent taking three representatives round the works belonging to a company which was their keenest competitor. By adopting such freedom there was no doubt that competitors would see something useful to them, but also the host had an opportunity to learn something. Personally, he had made a practice to send, sometimes, his foremen round his works with occasional visitors, and he found that their time was often well spent, as the foremen cannot but be brightened up and get new ideas when coming into contact with strangers.

The ease with which it is possible to get an interview with men in important positions in America stands out commendably and is in great contrast with one's experience in England, where a bonafide business caller is often kept waiting an unpardonable length of time. This is not only a great waste of time, but a very unpleasant way of doing business.

Another very important point as regards American engineers is that they have more liquid money, that is, more capital, which they are ready and glad to lay out in their works both for machinery and plant, as compared with the English engineer. This is a phenomenon which the English engineering

trade will have in future more to reckon with, for capital well laid out is power.

Mr. Wood spoke about trains with 50 carriages of 30 tons each. He had seen one eastward bound in Indianapolis with 120 carriages, some of 50 tons burden, and all provided with automatic couplers. The cheapness of railway carriage in America is another most important factor in favour of American industries. The Pennsylvania Railroad—a system with a rather larger mileage and rolling stock than the L. & N. W.—is carrying goods at the rate of one farthing per ton per mile, as against five farthings, which was the charge made by the L. & N. W., and at that lower charge the Pennsylvania Railroad shows a greater profit than the L. & N. W. Railroad. There are causes which the L. & N. W. cannot alter, such as dearer land, higher taxes, &c.; but again, there are many other causes which could be altered and improvements adopted, which would be greatly to the advantage of our English railroad.

As to technical education and the high value put on it in America, he might mention what he heard at Cornell University, which is one of the two largest technical schools in the States. He was there told that one year Mr. George Westinghouse, the founder of those large engineering works in Pittsburg, tried one year to engage, and take in an extra carriage to Pittsburg, the whole of an outgoing engineering class.

The Chairman (Mr. Ashbury) said they must not forget there were circumstances affecting American engineering works that were different from circumstances affecting English works, and they could not put the comparison exactly on the same lines. They must all admit that the Americans had a great deal of "go" and "hustle." The Americans did not consider so much the matter of first cost—which was to us very often the dominant factor—as the importance of getting a thing done, so as to make

money by it. As to education the Americans had the advantage that their elementary training was of a more modern growth than ours, they had had no old prejudices to grapple with, and the national system of education there gave every lad a much better chance.

As regards their works' methods, many of them were well worth imitation, and in this connection he was sure anyone acquainted with the new Westinghouse works would be struck with the amount of money that was spent in the provision of sanitary arrangements for the men. This could not fail to improve the *morale* of the workpeople. In meeting the American competition they must not be discouraged, they must determine to maintain the supremacy England has so long enjoyed, and be prepared to say "We believe in fair competition and let the best win."

Mr. Wood, in replying to the discussion, said that as regards workmen's houses he still held the opinion that England beat America considerably. He agreed that by taking people round their works they ought to be able to learn something from the visitor as well as show him something. The questions of education and shop costs were important subjects, which might well be dealt with in special papers. He might mention that when he saw Mr. Schwab, he was shown a paper containing particulars of the whole of the steel manufactured by the Steel Corporation three days before, in tabulated form. He hoped that by his paper he had helped to "stir them up," if he had done that he had accomplished all he had intended to do.

On the motion of the Chairman a hearty vote of thanks was accorded to Mr. Wood for his paper.

RECENT DEVELOPMENTS IN FINE MACHINE GRINDING.

READ SATURDAY, 9TH NOVEMBER, 1901,

BY

MR. HANS RENOLD,

MANCHESTER.

On my recent journey to America I noticed a new grinding machine performing work which in future is sure to influence greatly the manufacture of tools and machinery of all kinds. This machine will not only produce work at lower cost and more expeditiously, but produce a finish and an accuracy that cannot be obtained in any other way. Thinking that it might interest some of our members to hear of this and other grinding machines of the same class, I offered to the Council to write a paper describing them.

Mr. Norton's large machine has only been brought to its present perfection within the last year. The other Grinders, though used in America in a more or less perfect form for the last 20 to 25 years, are in this country only beginning to be known.

In my own works occupation is found for eight fine Grinding machines. The first of these was bought as long ago as 1883.

The machines referred to are not what are commonly known as polishing machines, disc, tool or twist drill grinders, but machines capable of producing the most accurate cylinder, cone or flat surfaces, as well as cutting edges.

Fig. 1, Plate 1, illustrates Mr. Norton's machine, and on the table is shown some work done by it (see the two large samples).

As I cannot improve upon the description given some time ago in the *American Machinist*, I have borrowed from it those parts that describe the general features of the machine.

The *American Machinist* says:—"It is beginning to be quite clear that few men, even among those who have given most attention to the subject, have realized the possibilities of grinding processes as applied to machine shop work, *i.e.*, to the finishing of parts of machinery. It has been for some time understood that many of the parts of machines, spindles, studs, bearings, &c., for machine tools, could not only be much better finished, but also finished at lower cost by grinding than by finishing them in the lathe, but no one has been able to say just how far this could be carried, nor how big the pieces might be that it would pay to finish by grinding. The designer, of the machine herewith illustrated, Mr. C. H. Norton, has for a long time believed that the grinder would be found an economical factor of production on much larger work than it had yet been used for, but has recognised that there was no way by which he could demonstrate his belief, because there was no machine, and apparently there was none who had the requisite faith in grinding, or the courage necessary to build such a machine as he considered ought to be built, though the heaviest and most powerful grinders heretofore built are of his design. Mr. Norton, therefore, and a few Worcester friends have formed a Company to do grinding for the trade, as well as making these machines for sale. Some of this grinding has been done in a manner and at a cost that have astonished those for whom it was done, and it will be interesting to glance at some of the features of the machine which did the work.

At the beginning it should be said that Mr. Norton believes that where grinding is to be done rapidly and at the same time

well, a machine to do it must be heavy and powerful, far beyond what is generally imagined to be necessary; and accordingly the machine under consideration, see Fig. 1, which is for grinding solid work up to 18ins. diameter, 8ft. long, weighs about 9,000lbs. and carries emery wheels 24in. diameter, 2in. face, driven by a belt 4in. wide, running on a spindle pulley, the largest step of which is 10in. diameter. This obviously means that a good deal of work can be done with the machine if only provision can be made for rigidly supporting the work and wheel arbor, and special pains have been taken to do that thoroughly.

The bed of the machine is a single massive casting which rests upon three points, so that danger of disturbances of alignment by settling of floors or foundations is eliminated. One of these points is directly under the wheel support, while the other two are in front, near the projecting flanges seen in the front view of the machine, forming nearly an equilateral triangle. This accounts for the bed being cut under so much at the ends; it being believed that it was better to support it at or near the points at which there is least deflection by weight, and make the projecting ends sufficiently stiff to ensure their deflection being imperceptible. The bed is very heavily ribbed and trussed inside, to carry the weight to the points of support without deflection.

The end views of the machine, Fig. 2, Plate 1 and Fig 3, Plate 2, give the best idea of the form and massiveness of the swivel table upon which the head and foot-stock are mounted. It is approximately of triangular section, forming a permanent water guard and a support for the head and footstocks, one of the ways upon which they are clamped being near the base and the other at the top; the clamping bolt taking hold of the slot which is midway between the bearing surfaces. The upper edge and front face of the swivel table are utilized for clamping to them the rests

which support the work, and curiously enough experience shows that the heaviest work requires these rests as well as the lightest; heavy shafts seeming, when not so supported, to set up vibrations fatal to the accomplishment of rapid and accurate work.

One of the points considered to be important in such a machine is that it should have a great range of speed for the rotation of the work and for the feed. The work is driven by the eight-step pulley, seen in Fig. 2, Plate 1, which is on a shaft having a pinion that engages with gear teeth cut on the periphery of the spindle whirl; the object being not only to get the necessary speed changes for the work, but also to do the driving with a narrow high-speed belt, which because it is narrow and fast running, will retain its place on the pulley no matter how quickly the table of the machine may be moved. This belt runs over a plain drum overhead, so that its speed is always the same, and it runs through guide forks connected with a lever, by which it is shifted from step to step of the pulley. The "risers" between the pulley steps are not vertical or radial as usual, but are at an angle of 45 degrees, so that the belt readily mounts them, and there is an automatic take-up for the belt by which its tension is maintained uniform, and thus a change of speed involves simply the movement of a lever, and nothing more.

For the feed or movement of the platen upon the bed a similar stepped pulley is provided, and this pulley is under the cover seen in front of the bed at the right in Fig. 1, Plate 1. The belt, which is most clearly shown in Fig. 3, Plate 2, runs on this pulley, passing through the opening seen. It also is driven from a plain drum overhead, and the idlers shown maintain a uniform tension upon it. This belt also is shifted from step to step of the pulley by a lever which is shown above the pulley cover; and, in addition, the vertical lever at the left, when moved, changes the table movement in the ratio of 3 to 1, by means of gears and a

clutch. This last mentioned lever is designed particularly for reducing the table movement for the final passage of the wheel over the work, to give the finish. The rate of table movement in this machine is relatively very high; the intention being to advance the work the full width of the wheel at *each* rotation of the work, which means of course, that where, for instance, a ground surface is 4ft. long, and a wheel with 2in. face is being used, the wheel passes over it while the work makes 24 turns. This is a *vital* point in rapid grinding. It enables the entire face of the wheel to be utilized, and experience with wheels used in this way shows that they retain their shape indefinitely, *i.e.*, they remain flat upon the face; and where during the progress of a job, the wheel shows signs of being slightly out of true, a small change of its speed always corrects that untruth; this change being provided for by the stepped pulley on the wheel spindle."

The samples done on this machine and shown on the table are a pair of steel pipe rollers, $4\frac{1}{4}$in. diameter, 6ft. long. They are used on printing presses, and require to be very true and straight. One of the rollers is rough turned by one cut in the lathe. The other shows the roller when finished, which has taken 45 minutes only. Formerly a second lathe cut had to be taken very carefully, requiring one and a half hours, and after this the work had yet to be filed and polished for an indefinite time.

The other two samples in the box are bars, 14in. long and $2\frac{5}{8}$in. diameter. One is rough turned down to $2\frac{1}{4}$in., the other is finished ground to $2\frac{3}{16}$in., that is, $\frac{1}{16}$th less than the rough turned piece.

The rough bar had two turning cuts for which the time required was 12 minutes to reduce it by $\frac{3}{8}$in. in diameter with a feed $\frac{1}{8}$in. per revolution.

The ground bar is $\frac{1}{16}$in. smaller than the rough outside diameter, and this also took 12 minutes.

With one lathe and one grinding machine four such bars can be produced in one hour.

If the rough turned bar would only leave $\frac{1}{32}$ instead of $\frac{1}{16}$, then two lathes and one grinding machine could produce eight per hour.

The smooth turned place at the end of the rough sample shows the old method of fine turning, which yet required to be filed. This latter method takes from seven to eight times longer than the grinding machine.

The illustration, Fig. 4, Plate 2, shows a group of work done by this machine, amongst which will be found some Corliss valves 8in. diameter, 48in. long. I saw quite a number of these being ground, which were sent in by steam engine makers from near and far, some being 1,000 miles away.

The few figures below show the time spent upon this class of work. The working limit they were ground to was ·001in.

Diam.	Length	Turning Feed.	Left on for Grinding.	Time required. per one valve.
5in.	23½in.	12 pitch	·020in.	15 minutes.
,,	,,	,,	·025in.	20 ,,
7½in.	36in.	16 pitch	·040in.	48 ,,
,,	,,	,,	·025in.	32 ,,
11in.	43in.		·010in.	50-60 ,,
12in.	60in.	16 pitch	·025in.	75 ,,

I was given to understand that it is proposed to build yet a larger machine which will take in 12 to 14ft., and will be used for grinding wrought iron tubes from 4in. to 8in. diameter, which will be screwed together and form the rams of hydraulic lifts. I have been told that it is hoped that such a machine will do away with four and it may be with six lathes of a type specially designed and laid down only recently for turning such tubes. These lathes I have seen and they were quite new, yet

the manufacturer thought he could not afford to keep them after their experience of grinding their shorter length, as sample shown.

On Fig. 5 is shown a standard car axle of ordinary size for tram cars, which was rough turned in the usual way in the lathe, and $\frac{3}{32}$ left on for finishing by grinding.

Fig. 5.

The "wheel fits," "bearings" and "dust caps" were finished complete in *one* hour. The bearings were ground to perfect cylinders with smooth surface, there being no "ridges" or "spots" to be worn off before the bearings can "run cool."

After what I have already shown, it goes without saying that this machine is eminently fitted to grind well and expeditiously, chilled iron rolls of very large and heavy dimensions, hardened steel rolls, cylindrical or taper.

My intention at first was only to describe this large Norton machine, but upon second thought I felt the paper would not be complete, and would also be of wider interest if I were to allude to three other grinding machines, which have been, so to say, stepping stones or predecessors in the development of this art of machine grinding.

I thought this course the more advisable, because it is just these three machine, viz.: the Cutter, the Surface, and Universal Grinder that will be most useful to our machine tool makers in general. In fact, I cannot conceive how any machine can be efficiently produced without them.

Before describing these machines, or speaking of the work done upon them, I should like to say that I hold no brief from

Mr. Norton or any maker of grinding machines, and have no pecuniary interest in the manufacture or sale of them. I shall make special mention of Messrs. Brown & Sharpe, because they have been the pioneers in the making and using of these grinders, also because in my own works we find their machines most suitable for our work.

A set of these machines will also soon be working in the tool room of the Manchester New Technical School, where they will be freely open to inspection, and if we find the right man to work them should become of great value to the district. They are there placed not so much for teaching purposes of our younger students as

1st. For producing a fine set of standard small tools, gauges, etc., which will serve as samples and references.

2nd. To be used in producing some fine justments required in the various departments, and which are not purchaseable articles.

3rd. To be used by an evening class of foremen, who wish for an opportunity to study and use these machines, as their own works do as yet not possess them.

Perhaps the machine the need of which was first felt was the

Cutter and Reamer Grinder, which is shown in Fig. 6, Plate 3.

As next machine to follow may be either the

Surface Grinder, see Fig. 7, Plate 3, or the

Universal Grinding Machine, see Fig. 8, Plate 4.

From the latter machine was developed, more for manufacturing purposes as distinguished from tool making,

The Plain Grinder, Fig. 9, Plate 4.

This machine was developed only during the last few years, after it became more and more evident what remarkable work can be done upon a specially designed machine, with a good

emery wheel properly used and with a plentiful supply of water. This machine might be called the first or small edition of Mr. Norton's large machine.

To describe the construction and sizes of these four machines would be merely reproducing pages of Messrs. Brown & Sharpe's catalogue, which every one of you can get for the asking, and therefore I will not weary you with these descriptions, but rather show a collection of work done upon them. Still more detailed information than is given in the catalogue will be found in special pamphlets, published by the same firm.

Their Cutter and Reamer Grinder pamphlet contains 23 pages, with 23 illustrations, showing to the fullest its application and uses.

The Universal Grinding pamphlet has 113 pages, with ever so many illustrations of possible uses and applications, as well as much useful information about grinding in general.

Special pamphlets upon Emery Wheels to be used on above machines are published by machine and emery wheel makers.

In Box No. 10 are a number of samples done on the Cutter Grinder, viz. :—

12 reamers, small and large.
6 recessing bits, small and large.
8 caning bits, ,, ,,
12 cutters of different types.

In Box No. 11 will be found the samples done on the Surface Grinder :—

3 sets of dies and punches.
3 sets of slides in different stages.
3 straight edges and squares.
3 sets of backing-off tools.
3 sets of parting blades.
3 flat drills.
3 drill bits.
2 sets of taper gauges, 1 in 20.

In Box No. 12 are the Universal and Plain Grinder samples :—

6 flat drills.
6 cylinder and cone reamers.
6 lathe centres, large and small.
6 holing punches, large and small.
2 bush grinding chucks.
2 sets of chain studs—bushes and rollers.
2 sets of chain wheel gauges.
3 sets of standard gauges, 8in., 6in., 4in. ϕ
2 ,, ,, 1in. and 1¼in.
4 sets of taper gauges 1 in 500.
2 ,, ,, 1 in 20.
1 bearing bush, hardened.
3 cast iron chain rollers.
1 large eccentre spindle.
2 machine spindles.
3 circular saws, backed off.
2 sets of taper arbors and sleeves.

However well a machine has been designed and made it requires suitable grinding wheels, as well as intelligence in the workman who uses it.

The question what a suitable grinding wheel is, is most difficult to answer, and another evening could well be spent to do justice to this subject alone. I will therefore only say that to select the right hardness, the correct grade or number of emery, to give it the right speed, the right feed, for either brass, cast iron, soft or hardened steel, cannot be determined by one simple rule. It is a matter of judgment and experimenting.

The wheels most commonly used are made of crushed emery stones, which are found in a great many places, but mostly in Turkey and Greece.

A better but much dearer wheel is made of corundum, also a natural stone.

The last few years an artificial product, called Carborundum, has been used for making wheels, which for certain purposes, at certain speeds, are doing better work than either emery or carburum. See sample of Carborundum crystals as they come from the electric furnace at Niagara Falls.

Still another excellent and artificially produced grinding material, largely composed of rubies and sapphires is about going to be made, but as the product is not yet on the market I have been asked by the makers not to say more about it at present. I have seen quite a goodly lot of this remarkable material, so far produced in experimental furnaces only.

In conclusion I should like to reproduce a few lines which Mr. Norton has sent me after I informed him of my intention to read a paper upon his machine. He says:—

As soon as a few simple laws pertaining to grinding are generally understood among mechanics, grinding will be as common as turning. While experimental attempts may appear to show that grinding is not profitable, wherever it has been adopted and carried beyond the experimental stages, it has proved so economical, that it has never been abandoned.

Journeymen machinists usually fail to make grinding pay. It is the man without mechanical training that best succeeds. The lathe man of experience always "spots off" a place for his steady rest or centre rest. The grinder of experience never does, but puts his steady rests directly against the unground work and proceeds. When he becomes familiar with the work he will have the piece all ground while the lathe man is getting ready, and the ground work will be round in spite of the belief of the journeyman machinist that it will not be.

Perhaps there is no other fact about grinding so important as that of steady rests. The cost of guiding is reduced as the

rigidity of the work is increased. There is no piece of work so heavy or "stiff" that it does not require steady rests; the heavier the work is the more rests are needed. To illustrate: The Norton grinding machine will grind locomotive piston rods 3½in. diameter by 50in. long, at the rate of one every 30 minutes, and these with rough turning left $\frac{1}{32}$in. over size. Remove the steady rests and the time will be two hours each, yet both will be ground good and to a ·001in. limit.

WEAR OF WHEELS.

We are sometimes asked what the wear of wheels is. It is difficult to give any rule for this as conditions vary, but where grinding has been adopted and carried to a system, the cost of wheels has not been enough to materially affect the economy of grinding. To illustrate: The example in the box sent you was turned and ground in 24 minutes. To finish it to a true cylinder without grinding would require from 45 to 60 minutes instead of 12 minutes. It is hardly possible to estimate or measure the loss of wheel when grinding this piece.

It is desirable to turn work as small as practicable in order that there may not be undue work for the wheel, or unnecessary time consumed. We do not advocate the removal of large amounts of stock by grinding, but we do advocate the turning of very coarse chips with the lathe, and the finishing be done by grinding, thus saving the time formerly consumed with the fine feeds and careful turnings.

DISCUSSION.

Mr. Charles Day produced two bars, one as it left the lathe and one that had been ground. The latter was accurate within $\frac{1}{4000}$, and the grinding was done in nine minutes. The unground

one was accurate within $\frac{3}{1000}$, and was exactly in the same state as the other was before grinding. The first operation on this bar was a roughing cut, occupying about nine minutes, the cutting speed being 94ft. per minute. The final cutting speed was 210ft. per minute, and the finishing cut took two minutes. He contended that it was quicker to thus turn very close to finished size, and leave very little for grinding, than to use a grinding machine for roughing processes. In view of the new steels now available, it was better to take the finishing cut on the lathe and simply true up dead to size on the grinding machine.

He noticed that Corliss valves were being ground a great deal. In his own experience he had found another advantage apart from accuracy in grinding them. By grinding they could get rid of the rounded corner that the tool left on the edge of the valve, by this means a slight reduction of lap is rendered permissible, with a consequent slight increase of port opening for a given valve travel. It seemed to him that in dealing with heavy objects it was better to move the wheel to and fro, as in the case of the Larndis grinder, instead of the work itself.

Mr. G. Bentley said his firm had given serious consideration to the question of grinding. They were compelled to adopt it when chilled iron rollers were brought into use for paper-making purposes. They had ground 7,458 different rollers, varying in diameter from 2 to 30in., and cylinders from 2ft. 6in. to 10ft. diameter, the largest cylinders being 10ft. diameter and 10ft. 6in. long, some of which went to the land of grinding—America. They had ground all sorts of rollers—brass, copper, iron, steel, chilled iron, wood, paper, cotton, flannel, rubber, leather, gutta-percha, and "burr" rollers. They had a machine of their own, which necessarily for large cylinders had to have the grinding wheel travelling. Within a fortnight they would

have under process of grinding a cylinder 12ft. diameter and 130in. long. In roller grinding, at all events, he did not think we were at all behind our American friends, as work of the kind to which he was referring had been carried on for the last 27 years. The machine used was, practically, one of their own make, with the exception of the bed. If any of those present would call at their works, at Bury, they would be pleased to show them their process of grinding. He guaranteed they could grind two rollers, say, 12in. diameter and 18ft. long, put them side by side and work one of them backwards and forwards, and give them a line from end to end of those rollers as fine as possible. They could also put them side by side, with some clay in the end, or anything to keep the water in, and they would carry water from Saturday dinner time to Monday morning.

Mr. Walter Heap said he agreed with Mr. Day as to the advisability of arranging for the wheel to move instead of the work, when the piece to be ground was of great weight; when lighter pieces were to be ground the wheel should be stationary. He also, like Mr. Bentley, was able to get a line from end to end of the roller, and let it hold water from Saturday to Monday. These things were going on long ago in England, but of recent years he thought the Americans had gone into grinding more than we had, and had taught us a good deal. We had a lot to learn from them, and by paying more attention to grinding instead of using the file for finishing we should get better results, and in less time.

Mr. William H. Cook said although we in England had used the grinding machine for grinding different parts of machines, &c., for a long time, it was certainly due to America to say they had paid more attention to fine grinding during recent years.

It was well, however, to remember that it was no new thing in England. Certain parts of textile machinery had been ground for the last 30 years, and it would be practically impossible to produce such parts as the spindle in any other way.

When trade was at its best he supposed there would be at the least 150 carding engine cylinders going out each week from the English machine shops, ground perfectly true and parallel, not to a thousandth of an inch, as that was not necessary, but nevertheless, to a fine point of accuracy. There were other parts of textile machinery which could not be produced, commercially, in any other way than by grinding. There had been a great deal of eulogy of the Americans during recent years but he, personally, did not think all the brains and ability of the old engineers had deserted us, and although the Americans had certainly stirred us up a little it was well that they should realise that England knew something about grinding before the Americans took the matter in hand, and it was most refreshing to hear the remarks of Mr. Bentley concerning what had been and was being done in their works.

Mr. Cook said it was the custom in all good mills, where any quantity of cards were put in, to grind the cylinders after they got in position in the mills. They were ground as correctly as possible in the works, and when they had settled down, after two or three days in position in the mill and taken up the temperature, they were reground in position.

Mr. S. N. Brayshaw said he made a great many paper cutters, from 4 to 6in. diameter, and from about $\frac{3}{16}$in. thick. He used to turn these on both sides in a lathe, but he found it much quicker to grind them to size. With regard to the importance of having intelligent men to deal with grinding machines, it was wonderful what could be done in the way of increasing the

output of a machine if they had an intelligent man behind it, who took an interest in the work, and they let him know that they appreciated any efforts he made to reduce the time occupied in turning out a given quantity of work.

Mr. Wm. Heap, referring to the grinding of cutters, said the way in which the edge was treated had always seemed very barbarous. They applied a dry emery wheel to it, and the direction of running was away from the cutting edge. Very often the temper of the edge was taken out by softening. He did not see why the emery wheel should not run against the cutting edge, or why water should not be used. The difficulty of keeping the tooth down on the guide, he was of opinion, could be got over by a little scheming.

Mr. T. Walton said he was sorry not to have seen any carding cylinders ground in the way referred to by Mr. Cooke. From what he had seen there did not appear to be any particular speed for grinding them, and they considered a piece to be finished when it was bright all over, without making any particular test. He had known of cylinders which took from 20 to 50 hours to make them perfect before it was safe to put the filliting on.

Mr. J. Vose said the paper suggested the importance of thinking about machines in groups. For instance, they had to consider the lathe and the grinder together, and the scope and efficiency of each. With regard to the times given by Mr. Day, he thought, if his information was correct, he had seen those lathes being made in the workshops of one of their members. They were built to the instructions of Mr. Ferranti, and were perhaps a little ahead of their time, but it was still interesting to know that lathes were at that time being produced

that would fulfil all the conditions as to high tool speeds, &c., that had since sprung up, and utilise them without fatigue. It was a great injustice to the textile trade to think there was no fine work about it. As to the truth of journals, the late Evan Lees had pointed out the importance of that in a book which could still be read with advantage.

With regard to the wrought iron tubes referred to by Mr. Renold, he thought the trouble would not be in the grinding, but in getting two tubes to screw together properly, male and female. He would like to know what they considered to be the difference between an intelligent man and a skilled man. It was strange if they did not consider it "skill" if a labourer produced a result on a machine. Whatever term they might use, if a man could produce a result on a certain machine, and another could not, the man who could produce the result ought to get the biggest money.

The question of which was the best machine—the Brown & Sharp, in which the work travelled, or the Landis, in which the wheel travelled, was a matter of interest.

Mr. W. A. Tritton said that the development of fine grinding tended to eliminate the fitter, as it was not necessary that the different parts of a machine should "see each other" until they were assembled.

At the works he was connected with they were turning out work similar to the cylinders shown by Mr. Renold, but a trifle larger in diameter. This work was done on a Landis machine, in which the wheel travelled along the work.

When the machine was started they were about three weeks in getting the first satisfactory job off, though they attended most carefully to the instructions.

They could not get the work to an acceptable degree of truth until they used three substantial gun-metal bearings, covering

two-thirds of the circumference in place of the three-and-two-point steady rests provided.

They then obtained a surface free from waves, and the method referred to was the only one that removed the difficulty.

Travelling steadies were found to be unsatisfactory for fine work.

It should be remembered that, theoretically speaking, it was impossible to grind a true cylindrical surface while using the steadies, on account of their profiling action ; on the other hand it is equally difficult to turn a parallel cylinder without the steadies, so that a manufacturer must arrange his methods to strike a happy medium.

Mr. J. S. Myles said that flat surface grinding was a most delicate and intricate operation, and he would tell those gentlemen present who thought of putting down flat surface grinding plant that they must not hope to attain any such results as those described for circular work.

He had at present 60 fine grinding machines, the bulk of which were working night and day, producing on an average about half a million of sizes every year, inside half a thousandth —that being the margin limit of inaccuracy. There was no question to his mind that if a piece of work could be produced by any other method outside surface grinding, it was desirable that the work should be produced by that method. His company had just put down some new machines, in the patents for which he was interested, for grinding flat work of various kinds and thicknesses, wherein the principle of wet grinding was adopted. The machine was entirely new. He reiterated that after an experience of nearly five years with the machines he had referred to, dry surface grinding was not a commercial success, to the extent of circular grinding, where a good stream of water could be brought to bear between the emery wheel and the work.

Mr. Renold in his reply said he did not wish to enter into the merits of the machines of different makers.

The object of grinding is not for removing metal; that must be done in the turning lathe. The grinding wheel is for finishing surfaces, and this it does in a manner and at a rate which nothing else can equal.

He understood that there were none of the large Norton machines in England, and not many had so far been built, so that he did not think many of those present could know what it was capable of doing without going over to America to see it.

He was glad to hear that Mr. Bentley of Bury had made so much progress in grinding, as he knew that when first he was acquainted with that firm, some 25 years ago, they then had a great deal of trouble with the grinding of heavy rollers,

With regard to Mr. Brayshaw's remarks, he only emphasized Mr. Norton's statement. Grinding must not be started in a mere experimental or amateurish way, and the first little difficulties be allowed to discourage. An intelligent man must be put in charge of the machine, and not too much be expected for the first six months. The machine mnst be understood and experience with it gained. There was no fixed rule to work by, as circumstances and speed vary with every piece of work undertaken. Results must be watched and arrangements made accordingly.

As to the grinding of cutters, to obtain fine cutting edges too free a cutting wheel cannot be used, and no pressure must be exerted. There was no real difficulty in grinding fine cutting edges, but it required care. He might also mention that they stoned nearly all cutters with honing stone to get the edge into a first-rate condition.

Mr. Tritton was quite right, that grinding is reducing fitters' expenses, and that is what is wanted nowadays. The fitter in

the production of machines is a most costly man. The machine and not the hand man is what nowadays is wanted.

As to the steady rest not helping to make the work round, Mr. Norton in his notes was very emphatic about the need of it, and no further remarks of his on this point were necessary.

He would, however, tell Mr. Tritton that Messrs. Browne & Sharpe have lately been bringing out an improved steady rest with springs, automatic and self-adjusting. If surface grinding was not a commercial success why did Mr. Myles's firm employ 60 machines? The fact was clear, they could not do the work in any other way. As to wet surface grinding, Messrs. Browne & Sharpe have had this matter experimentally in hand for many years, but with what result he could not at present say. Wet grinding was certain to come.

On the motion of the Chairman a hearty vote of thanks was accorded to Mr. Renold for his excellent paper.

Plate 1.

FINE MACHINE GRINDING.

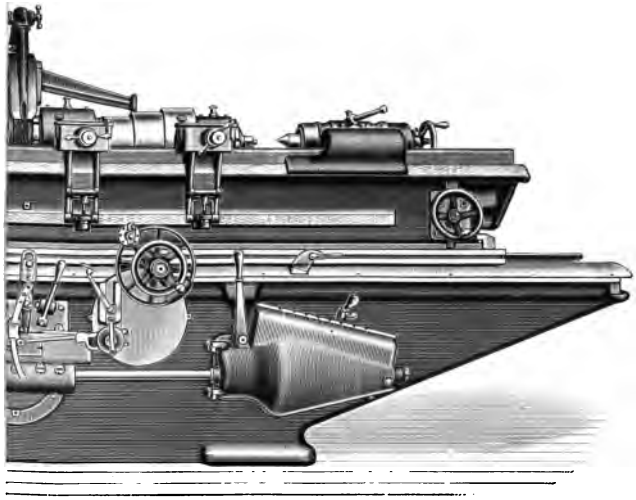

. 1.

2.

UNIV. OF MICH.

ELECTRIC WELDING.

READ SATURDAY, 23RD NOVEMBER, 1901,

BY

Mr. T. T. HEATON,

LONDON.

This is not the first paper by a good many on the subject of electric welding, but as I have for some years been engaged in a business of which electric welding forms an important part, it occurred to me that some further information relating to this particular process, than has previously been publicly presented, might be of interest to this Association.

There are two systems of electric welding.

In the first the heat necessary is obtained by means of an electric arc, and various methods of applying the electric arc have been adopted.

The method with which this paper is chiefly concerned is one of those in which the electric arc is the main factor.

The second system is one which was invented by Professor Elihu Thomson, in the United States of America. It is specialised by the Thomson Electric Welding Company, of Lynn, Massachusetts, and in England by the Electric Welding Company Limited, Basinghall Street, London; whose engineer, Mr. R. J. Wallis-Jones, has kindly supplied me with many of the facts and figures relating to the Thomson process given in this paper.

Those who have studied this question are aware that the Thomson system of welding consists in:—

(*a*) Placing the pieces to be welded in contact.

(*b*) Forcing through the metal to be heated very large quantities of electric current, so that the greater resist-

ance of the portion to be welded, due to the bad contact of the pieces it is desired to unite, is sufficient to raise the temperature at the point of contact to a welding heat.

(*c*) As soon as a welding heat is attained, strong pressure, mechanically applied, forces the pieces together and completes the weld, which may be hammered or not as desired.

In the Thomson process heavy sections can be united, because the heat being generated within the metal, from the centre outwards, pervades evenly the whole of the surfaces to be welded, and ensures a sound weld throughout, and it is in this that the Thomson process differs from all other systems of welding.

Other systems depend on the application of heat from a more or less outside source and are, consequently, more liable to produce imperfect welding in the interior, even when considerable care and skill are used. The more extraneous the source of heat the greater the risk of an imperfect weld.

The Thomson process is specially useful in cases where welding by ordinary methods is extremely difficult.

It is used for a great variety of work. The welding of angles, tees, rail sections, wire, welding spokes of metal wheels into the hub, welding high carbon tool steel to ordinary grade machinery steel, in cases where the cutting portions of tools, such as twist drills, reamers, taps, etc., are united to their shanks by this process. In all these cases welding by other methods would be either very difficult or impossible.

The Thomson system is also applied to the heating of pipes for local bending, and for welding additional lengths of pipe to coils of piping as the coiling proceeds.

Railway switches, crossings, etc., are made by welding the parts together, and Mr. Moxham, of the Johnson Company,

of Johnstown, Pennysylvania, has made single welds of 48 square inches area at the joint.

The great saving in electric welding occurs in the economy of labour.

The power required to make these welds is rather high. The time during which it is applied is however short, and it is only required during the actual operation of welding.

The following figures are given for iron and steel welding:—

Area in square inch of weld.	Watts in primary of welders.	Time in seconds.	H.P.	Foot lbs. during time occupied.
½	8,550	33	14·4	260,000
1	16,700	45	28·0	692,000
1½	23,500	55	39·4	1,191,000
2	29,000	65	48·6	1,738,000
2½	34,000	70	57·0	2,194,000
3	39,000	78	65·4	2,804,000
3½	44,000	85	73·7	3,447,000
4	50,000	90	83·8	4,148,000

The speed of welding depends on the amount of current used, and can be varied accordingly.

The apparatus required consists of:—

1. A generator of alternating currents.
2. A welding transformer, as it is called, with clamps and mechanical appliances to work the heated metal.
3. Electrical regulating apparatus to control the flow of current, that is, to regulate its quantity to suit the work to be done.

The voltage is low, only about 1 or 2 volts.

The current required is rather high, as may be seen from the column headed "Watts in primary of welders" in the table just quoted. If only one volt is required, these figures of course, represent the quantity of current in amperes.

It is claimed for the Thomson process that of all the electrical energy put into the metal to be treated fully 75% is useful. The 25% lost is dissipated chiefly by radiation and conduction, and

the actual cost of fuel for welds in this process and in any open forge are stated to be about equal under continuous working conditions. This being so the electric method is much more economical with intermittent working.

The strength of welds made by the Thomson process was tested by Dr. Kennedy, and found as follows :—

Wrought iron bars ½in. to 2in. diameter, ratio of strength of weld to unwelded bar 89%.

Bessemer steel 96·5%.

ARC WELDING.

There are two or three methods of applying the electric arc to the welding of metals. The earliest application was, I believe, invented by De Meritens. It was developed and extended by Benardos, whose patent covers two ways of applying the arc. The first and simpler method is that of striking the arc between the metal to be welded and a carbon pole forming part of the circuit. In the second method two carbons in a suitable holder are used either parallel or inclined towards each other in the same plane, and the arc is struck between these, much as in an arc lamp. The arc is deflected, generally by means of electro-magnets, and attracted or repelled towards the metal to be heated. This application has been developed more especially by Dr. Zerener, of Berlin, and its advantage is referred to later on.

Mr. Charles I. Coffin, of the United States, has also developed arc welding in various ways.

The method I propose to describe more particularly is based on the simpler application of the Benardos invention, for welding by the direct action of the electric arc.

The broad principle of the application of this system is as follows :—

The current flows from the dynamo to the metal to be welded, from the metal to be welded to a carbon, from this carbon

through a resistance regulator, for adjusting the amount of current required, and back to the dynamo.

When the carbon is placed in contact with the work the current passes. By withdrawing the carbon a short distance an electric arc is produced which may be from ¾in. to 1½in. or even more in length.

By withdrawing the carbon altogether from the work the current is made to cease.

The work thus forms one pole of the arc and the carbon the other.

The work is almost always the positive pole and the carbon the negative, because the positive pole in an arc is always the hotter and, therefore, it is better so to arrange them, as will be easily seen.

The disadvantage of this single carbon system, not however a serious one, is that every variation in the distance between the carbon and the work affects the amount of current passing. In the twin carbon, or Zerener system, the carbons are always at the same distance apart, and the current is therefore constant.

There is however, in my opinion, one great advantage in the single carbon system, viz., that as the work forms one pole and the arc starts as it were in it and proceeds from it, there is practically no danger of oxidation within the weld. Whereas in the twin carbon system, in which the heating of the metal depends on the flame of the arc playing upon the work from outside, it appears to me that oxidation is much more likely, and that welds made by it are therefore not so reliable as the welds made by the single carbon system.

In the single carbon system the work may be made to form part of the welding circuit by various means, according to circumstances.

The work may stand on a wood base for the purpose of insulation and a cable brought from the main conductor clamped to

it, or the said cable may be permanently attached to a table or anvil on which the work is placed, the table or anvil also being on a wood base or otherwise insulated.

The carbon may be fixed in a machine for special purposes or, as is generally the case, in a suitable insulated holder held in the hand of the operator.

The latter has been found in practice to be the better method, both economically and in the quality of the welds produced with it.

SAMPLES. CARBON HOLDER WITH CABLE ATTACHED.

On the table will be found a carbon holder such as is regularly in use at the author's works. It consists of a spindle of metal, with means for attaching the cable, which is very light and flexible, for conducting the current from the carbon to the resistance regulator. The carbon is held in a clip between metal jaws. There is a wooden handle, with a carefully insulated circular metal shield fixed to it, for protecting the operator's hand and arm from the rays of the arc. The carbon may be swivelled to any angle most convenient for the operation in hand.

It is most important not only that the hand and arm, but also the face and eyes and any other uncovered portion of the body should be protected from the rays of the arc. These have a strong burning effect, exactly similar to that of the sun's rays but intensified by the proximity of the arc, and rather unpleasant effects are felt by the operator or any observer if they are careless enough to neglect the protection of the shields provided. A short exposure of the skin does no harm. In fact, a very healthy complexion may be attained by a couple of minutes exposure to the arc.

Canvas screens or screens of other material are placed in the welding shop. These may be movable and they are used to protect surrounding workpeople from the glare of the arc.

SAMPLE HAND SCREEN.

The face and eyes of the operator are protected by a hand screen, having a coloured glass window through which he can observe the arc and watch the progress of the work. A sample hand screen is on the table. The writer usually employs three glasses together, generally two red glasses with one blue glass between them. This arrangement of glasses may be varied to suit the fancy or experience of the operator.

By this single carbon system various kinds of welds are made. These may be divided into two types, viz., hammered welds and fused welds. The type adopted depends on the object for which it is required, and the convenience with which the weld can be produced in the position where it is desired to make it. Both these types of welding are very efficient when properly applied.

SAMPLES.

There are samples here which have been made to illustrate various kinds of welds.

SAMPLE BARREL.

There is a small steel barrel of a special kind, made so that one end may be entirely removable.

LONGITUDINAL HAMMERED WELD.

The body is made from a single steel sheet, and has one longitudinal weld which can be clearly seen on the side of the barrel. It may be observed on both sides of the sheet forming the body of the barrel, inside and outside.

This longitudinal weld is made by fixing the body on a suitable anvil with the edges of the joint abutting, which are securely clamped down. Small pieces of steel scrap are laid over the abutting edges, heated to a welding temperature by the arc and hammered with a swage and a light sledge hammer.

This is a specimen of the hammered weld.

The weld is a very sound and perfect one, and the thickness of the steel welded is 14-B.G. = ·0785in. or 1·994 $^{m}/_{m}$.

END FUSED WELD. BARREL.

The closed end which is flanged is fitted into the body, a strip is fixed on, both inside the flange of the end and outside the body to make a very strong chimb for the barrel, and these four thicknesses are then fused together without hammering.

This exhibits the other type of weld mentioned—the fused weld.

The open end of the barrel has an angle shelf fused into it in a similar way, the steel angle being made first into a solid ring with a hammered weld at the joint where its ends come together. It is completed before being inserted into the barrel.

This barrel is shown because it has in it some pretty examples of the two types of arc welding practically applied. It will be seen that some of these welds could not be made by any other than the electrical method, for example, the thickness of the body is only 14-B.G. = 1·994 $^{m}/_{m}$ or ·0785in. No smith could weld this thin metal at the fire, and it is too thin for gas welding such as is usually employed for boiler flues, tubes, &c. Gas welding is not practicable for thicknesses less than $\frac{1}{8}$in.

The weld at the joint of the steel angle is a difficult one for a smith but easy with the electric method. Its quality may be judged by inspection as it is easily visible.

HAMMERED WELD.

As an example of thin welding there is also shown a weld of two steel sheets only 22-B.G. thick = ·79 $^{m}/_{m}$ or $\frac{1}{32}$in., which is a hammered weld, and a good specimen of very thin work; probably it is the thinnest steel ever welded.

STEEL TUBE.

There is a piece of steel tube $2\frac{3}{4}$in. diameter × $\frac{1}{16}$in. thick welded in the same way. This was welded and has been tested by Messrs Lloyd & Lloyd, who first introduced the Benardos process into this country. The test pressure was 300lbs. per square inch internal hydraulic pressure.

BOSS WELDING SAMPLE.

As another specimen of fused welding there is a sample of a boss welded to a sheet by fusing. This is really a bung arrangement for a barrel or tank, but the application of this kind of weld is wide, and many examples of its applicability will occur to members.

SUNDRY SAMPLES.

There are also sundry joints the application of which will be clear on examination, or at least suggestive of various kinds of work to which electric welding may be applied.

Reservoirs for lamps such as the Wells light are made by this process. They are tested to 40lbs. per square inch and are a first-class job. The sample shown was tested to 60lbs.

Vessels have been made only $\frac{1}{16}$in. thick by over 16in. diameter, and tested to 250lbs. per square inch by hydraulic pressure without discovering flaws or defects or disturbing the soundness of the welds.

The strength of arc welds has been tested and tables of tests by Mr. Kirkcaldy have been published by Messrs Lloyd & Lloyd showing that the electric arc weld is superior in strength to the weld of an ordinary smith. An ultimate strength of 90% of that of the original metal having been found usual in the arc welds where the section of the weld was equal to that of the original material. In some cases as much as 98% has been found, and the ratio of the strength of the electric to the smith's welds in one series of tests with bars, varying in section from 2in. × $\frac{1}{8}$in. to 2in. × $\frac{1}{2}$in., is 118·5%. The superiority of the electric welds was most marked in the welds of the thinner material, where they were double the strength of the smith's welds.

The metal does not become hard or brittle in the welding. It does not deteriorate any more than in ordinary smith's welds.

The following are analyses of steel and iron before and after welding, which were quoted by Mr. E. J. Duff, of Glasgow, in a paper read some time ago before the West of Scotland Iron and Steel Institute. They are of considerable interest.

	Before weld.	After.	Before.	After.
Steel.				
Carbon	·44	·22	·52	·29
Silicon.....	·03	trace	·05	trace
Manganese	·57	·14	·42	·36
Sulphur	·041	·036	·039	·035
Phosphorus ..	·102	·100	·07	·05
The following are Tests of Iron:—				
Iron.				
Carbon	·38	·15	·3	·13
Silicon.....	·03	·00	trace	·00
Manganese	·53	·16	·36	·30
Sulphur	·16	·12	·11	·07
Phosphorus ..	·100	·124	·105	·087

The changes appear slight and are favourable, the resulting compound being nearer pure iron in each case, though for some purposes it would be better if the carbon and manganese were not reduced.

SAMPLE.

There are many other applications of arc welding.

Experimentally, I have had aluminium welded by this process with fair success.

LEAD WELDING. SAMPLES THIN AND THICK.

There are two samples shown of welded lead plates for the joints of acid tanks, etc., very superior to and cheaper than the blow pipe welds usual with lead. The metal is throughout pure lead, no flux having been used.

The repair of steel castings is becoming very common. The simple electric arc and single carbons being used by many firms. Blow holes are stopped up quite soundly and perfectly by a good electric welder, and subsequent annealing with hæmatite ore makes the weld invisible.

Cast-iron has been successfully welded by this system. Teeth broken from large cast-iron spur gearing have been replaced by new ones welded in, which have been quite as serviceable as the original cast teeth.

Boilers, which would otherwise be useless because of cracks due to local heating where deposit has been allowed to form, can be cheaply and effectively welded and made very strong by arc welding. Some very curious examples of work of this kind have been done in kitchen boilers, small vertical boilers, greenhouse boilers, etc., all of which are peculiarly subject to the kind of defects mentioned.

Cost.—Properly and judiciously applied, electric welding is cheap. It is best applied to specially difficult examples. Many smiths' welds, which require highly skilled men owing to their difficulty, may be very much more cheaply and reliably made by electric methods.

On the other hand it is a mistake to suppose that welds which would be simple and easy to the ordinary blacksmith would be more cheaply done by electricity. I mean such cases as, say, ordinary bars ½in. to 1in. round or square, and such simple work.

Probably they would cost more if made electrically than by the ordinary methods.

In the past there have been some failures in applying electric welding, but so far as I am able to judge these failures have mostly been due to the belief that electricity would come in for everything, and so, work for which electricity is least suitable has been expected from it, with the inevitable result of finding electric methods more expensive than the old methods in cases such as I have mentioned.

The chief item in the cost of electric welding is not the labour involved, but the power required for producing the

amount of current for the necessary heat. The current varies with the heat required.

A suitable current for making the longitudinal weld of the barrel body exhibited, made of 14-B.G. steel, is about 200 amperes by 80 volts. This is equal to about 21½-E.H.P., say 27-I.H.P. Of course this is not applied all the time the weld is being made. The weld in question, about 2ft. long, occupied the operator from start to finish, including fixing on the anvil and taking off again, 15 minutes; and the arc would be actually used about 5 minutes of this period.

The fused welds require less current than the class of hammered weld referred to, and are very quickly done. The ends of this same barrel would be welded at the rate of about 6in. per minute. The actual speed of travel of the carbon round the end is often as quick as 12in. or 14in. per minute, but there are fixing and adjustment of parts, etc., to include in the welder's time.

An angle weld, such as was made to complete the angle steel ring in the same barrel, would occupy the welder not more than 10 minutes in all. It is a thoroughly sound hammered weld.

THE PLANT.

The plant required is very simple. A well designed and efficiently governed engine, and a good continuous current compound wound dynamo of ample capacity, with the usual switchboard and measuring instruments, and a current regulator for each arc. In plants such as are used for this work the load varies enormously, and in older installations a large storage battery has been considered necessary, to keep a constant load on the engine and so assist in governing its speed. It is, however, now possible to do without a storage battery, thus saving a large item in first cost of plant. In my opinion the engine and dynamo should be separate and a belt used to drive through, in preference to a direct coupled arrangement.

WORKMEN.

There is no danger or risk to the workman as the voltage is low in all electric welding installations, and it is not necessary to employ highly skilled men in the work. The men must, however, be of good average intelligence and pluck, as the work requires care and, in learning, it often involves rather discouraging results in the early attempts of a learner. As in most other mechanical processes the best results are obtained from electric welding by specialising the work and the workmen.

ADVANTAGES of ELECTRIC WELDING.

It may perhaps be asked "Why should we trouble about electric welding?" The answer is, that by its use many kinds of joints are made more cheaply, and all joints to which it is applicable are made more perfectly than by other means.

Hitherto rivetted joints have, in most cases, been considered to give the nearest possible approach to the advantages of the solid metal they unite, but however well riveted joints are made they are always liable to leakage, especially in thin metal and where they are subject to the wear and tear of being moved from place to place.

In cases of this nature rivetted joints demand thicker metal than those made by electric welding, and this applies to all the joints of thin plates.

Weight is saved therefore by the use of electric welding, greater strength secured, and at a cost at least no more than that of rivetting, As to the quality of the joint there is no question, a properly made weld being as tight as the solid plate in which it is used.

It appears to me that in the future electric welding will be applied more and more, and that steam boilers, among other things, might with advantage be made with electrically welded seams, while manhole rings, flanges for fittings, etc., would be exceedingly suitable subjects for the application of this system.

In presenting this paper my object has been:—

First to contribute something to this Association which may be of use in assisting some of the members, who are daily considering how best to improve and cheapen methods of manufacture.

Secondly to draw the attention of members to electric welding with a view to its being more widely extended. Its advantages are beginning to be recognised to some extent, and it is being employed for a number of special purposes, as has been shown, but I feel confident that before many years are gone the advantages of electric welding will be much more fully recognised.

I am aware that this Association comprises a great number of practical engineers, who will, in the discussion of this question, bring forward many points which will help to show all that is likely to be of value in electric welding in its application to the various constructions in which it can be employed.

I have ventured on one or two perhaps bold suggestions, and hope that they will not be overlooked in the discussion which will follow my paper.

DISCUSSION.

Mr. Daniel Adamson said with regard to electric welding in connection with steam boilers they had had a little experience, and so far as they could see it was not satisfactory. Some years ago they had some patent boilers to make, constructed of practically rectangular boxes which had to be welded at the corners. They found that whilst these were welded on the outside of the corner, the weld had not gone through to the inside. It was not possible to reach the inside of the boiler or box to apply the arc in that position, and possibly that was the reason why

the weld was not perfect all the way through. This seemed to to show that electric welding was not likely to be suitable for boiler work as they understood it—that was, plates of half-an-inch thick upwards. If they heated a steel plate, as it was heated in the electric arc, and allowed it to cool down again without having worked it in any way, they got a product which was very similar to the original steel casting or ingot from which the boiler was made, and as they knew, the original ingot was not suitable for putting in a boiler in its first state. Therefore after heating the steel plate to a welding temperature they must work it in some way. Now if the structure of the boiler was so designed that it could be worked by a hammer, it could also be heated by other methods than electric welding, say by gas welding. Therefore it appeared to him that electric welding for boiler work had no advantage over gas welding. It would not be an efficient weld to carry pressure and resist the effects of heating and cooling to which boilers were subject, if it could not be worked. He had found similar difficulties in connection with the welding of flanges and fillets and other parts of boilers. When the flanges were faced across the welding was cut through, thus showing that it was only skin deep.

The lecturer had referred to the analysis of parts before and after welding. The analysis might be satisfactory, but it did not prove anything. The ingot as it left the furnace gave a quite satisfactory analysis, but it was not in a fit state to be used in construction. With regard to the Thomson process, the lecturer might have mentioned that rings could be welded by it as satisfactorily as independent bars.

Mr. Marsden said he had worked with the Electric Welding Company for six years when they started, and everything they tackled appeared to be satisfactory. He might mention that at the Pimlico Wheelworks they had two Thomson machines,

and they were bending and welding about 130 to 140 tyres per day and putting them on the wheel. They were all sound, and there was a smaller percentage of broken tyres—8 % less than they had—when welding in the fire. For general work nothing could beat the Thomson process. He had tried the arc process but it did not prove satisfactory. It appeared to be only like painting a joint, and if it came to a proper test it would, he thought, not be right. In future they might get over that difficulty, and he hoped they would.

Mr. Sam. Boswell agreed with Mr. Adamson that so far as boiler making was concerned the day of electric welding had not yet come. He was always afraid electric welding had too much the appearance of pasting rather than real welding. A welding process, to be reliable for boiler-making, required to be not only a melting, but a kneading together into a homogenous mass, and not over too limited an area. Then again, the boiler maker could not do the justice he liked to a process in the way of experiments. They were subject to the requirements of the boiler insurance companies to a very large extent, whose chief engineers had certainly a very big voice in these matters.

There were some boilers, made in Hull, he believed some years ago, with flanged seams, all welded, and no rivets about the flues: he was questioning the individual whose duty it was to go over them occasionally, a year or two after they were put down, and he found that it would have been better if they had been left out. The welds were continually opening out and could not be kept in good condition. If they could get a weld solid, and put it somewhere where it would not be subject to racking strains and varying temperatures—which were far more destructive in their effects than those due to pressure—it might be all right. So far, however, as welding on any part of a steam boiler subject to tensile strain or internal pressure was

concerned, the Insurance Companies said they must not do it. They could weld it and sell it if anybody would buy it, but it would not be insured afterwards.

Then again, with an 80 % joint there was a margin of safety available before they had to knock down the pressures, which did not exist in a solid ring where the corrosive action of water on the plates would soon take away the factor of safety and necessitate a reduction of the pressure in a comparatively short time. Of course the thickness of the plate had to correspond with the strength of the joint or weld.

Riveted joints would stand the straining set up by varying temperature and adapt themselves without leaking far better than welded joints under the same conditions. Riveted joints in fact possessed a virtue which was most appreciated by those who had most to do with them. He had been waiting for electric welders to get a better knowledge of the subject and put something before them which they could rely upon. If something were brought forward which they could adopt with some amount of confidence, and which would enable them to produce as good work at a less price, or better work at the same price, they need not think the boiler maker would be backward in adopting it.

In his opinion there was still a want of confidence in electric welding, even by those who were fairly expert at the business. He had recently been carrying out some boiler repairs for a firm who did electric welding in connection with their usual business, and he had requested them to try it on one of the troublesome little boiler jobs, but they did not care to try the experiment, which he thought showed a want of confidence.

Mr. Wm. Heap said that some years ago he had a good deal of trouble with twist drills owing to the nibs breaking off. It occurred to him that it would be an advantage if they could

weld the nibs on the end of the shank. The shank had to be turned to allow of a new nib being welded on. He tried to weld one on, with the drill fixed in one vice and the small portion of steel representing the nib in the other, but the sectional areas were so disproportionate that the smaller section got melted off before the other was red hot.

He should like to know whether it was possible to weld on to a drill a nib which had been twisted off, without having to turn the shank up again. He did not mean a "botch" job, but one that could be passed as all right and without any very rough surfaces. With regard to the application of electric welding to other work, he might mention that they had about a dozen 2in. bolts to take out of a foundation, and had intended to drill them out with an electric drill, but as that operation would have taken a long time it struck them that they might do it more quickly by melting the bolts off with electricity from the dynamo.

This was accordingly done, and the cost was only a third of what it would have been with drilling. There was one peculiarity about the effect of watching the welding on the eyes. He was wearing blue glasses at the time. They were so deep and dense that in ordinary daylight he could not discern objects with them at all. He found that he could look at the flame through them without any discomfort, but the day after his eyes were very much inflamed and swollen, accompanied by sharp smarting pain. In his opinion some kind of chemical rays came into operation to produce this effect, but he would like to hear the author's views on the point.

Mr. J. Vose referred to a paper read by Mr. B. A. Dobson six or seven years ago, before the Institution of Mechanical Engineers. Practically all that appeared to be known now was in that paper, with the exception that now we had definite tables of the HP required, &c. It was also pointed out that simple welds

could be made just as well or cheaply in the ordinary fire, but in the light delicate work on textile machinery details there was really no comparison between electric and ordinary welding, as by electric welding they could really do a job well which they could scarcely do at all before. Two or three years ago he happened to be in Crewe works, and saw the two methods being used together according to applicability. Certain parts, about 1in. to 1¼in. diameter, were being electrically welded, and as soon as the weld was complete, turned over to the ordinary smithy, and swaged and finished in the ordinary fire if need be. One or the other method was used just as it was applicable, and he gathered that that was the way which the paper seemed to recommend.

The paper was a very valuable one in that it gave the amount of power that had actually been found necessary. He thought that if the moderation in tone adopted by the author were more universally followed in regard to new things or processes, there would be a good deal less disappointment, and greater progress would be made.

Mr. Thomas Ashbury said his sympathies seemed to go with the Thomson process. Fourteen or fifteen years ago he had seen it in its early stages, and was much impressed with the method. He had seen it worked out very well on the Tyne for such purposes as chain making, in which welding by the Thomson process had been very effectively applied. What he wished to say more particularly, however, was that he had seen aluminium effectively welded. At the Pittsburg Reduction Co.'s works, every hour of the day, the welding of aluminium was carried on, and without the use of electricity. Continuous wire ropes, electric leads for tramway purposes, &c., made of aluminium, were welded up to any length required. Large sheets were also welded in a perfectly sound manner.

He might also mention that only a month ago he was in a laboratory at Westminster where he had an opportunity of seeing another process of welding aluminium, and the operation was performed so effectively that when the rods came to be tested not one out of twenty-four broke at the weld. They all broke at distances of about 2in. to 4in. or 5in. from the weld, thus showing that the weld was perfect. In this case also there was no electrical apparatus, and no solder was used either in this process or that at Pittsburg. He thought that when they came to understand the question of temperatures more, in relation to metals, they might be able to obtain results in welding, which at present were not secured.

Mr. J. E. Hardman said he would like to know if the author considered, in the case of the longitudinal hammered weld, where small pieces of steel scrap were used and a swage and light sledge hammer applied after heating, that the effect of the operation really went right through the metal. Some years ago he tried to weld the bolt flange on a stand pipe. He used small pieces of steel scrap as described, but he found that these did not amalgamate with the pipe, but came off after the experiment was finished. He used the Zerener process, with two carbons set at an angle of 90 degress. He might add that out of ten people engaged in the experiment nine had to be away the next day; some had to go to the hospital. They used coloured glasses—red and blue, but some of them whose faces were so protected were burnt as if they had been in the tropics. He would like to know why there was such a great difference in the voltage required for the Thomson and the arc processes. As to riveted joints there was this to be said, they knew to a nicety what the strength of the joint was, but welds could not always be relied upon. Until they could be produced so as to be relied upon with something like assurance, he preferred the riveted joint.

Mr. W. Ingham said that some time back he was on the point of condemning a number of pinions on account of some rather large blow-holes, but he was assured these could be made perfectly sound, and on a further visit he found they had been made apparently quite sound. They had been electrically welded, and he understood that a great deal of money had been saved by applying the process in such cases. From what he could gather, however, there was a risk of having one's face curiously bronzed and discoloured, if it was not properly protected during the welding operation. With regard to boilers he might emphasise what had already been urged, that with riveted joints they could calculate the strength to a nicety, but the results with welding were very uncertain. They might get a good weld or a bad weld, and they could not make any approximation to what the strength of a welded joint was. This applied to electric as well as to all other kinds of welding.

Mr. T. Wood said that in welding steel castings he had no difficulty in finding the welded place afterwards, because when they came to turn it they found that the welded portion had every appearance of cast iron.

Mr. Alfred Saxon corroborated Mr. Wood's remark as to the welded place in steel castings presenting the appearance of cast iron when machined. As to the two processes of welding he had come to the conclusion there was a field for both the Thomson and the arc systems, and, as the author seemed to point out, one seemed to be more suitable for heavy and the other for lighter work. He would like to know whether the author considered the Benardos process best for general engineer's establishnents? He was quite sure the Thomson process was too expensive, even with such improvements as might have been made since Mr. Dobson read his paper, who

told them that to weld a 2in. bar required 80 HP for so many seconds. It seemed to him that engineers were bound in a matter of this sort to take into account what was likely to best suit their particular requirements.

He had had some experience in having things electrically welded, and the results had varied. He remembered sending a screw that had accidently been broken to be electrically welded; it proved a failure however, and a new screw had to be made. On the other hand a steel pinion about 7ft. or 8ft. diameter, that had been supplied to a cotton mill, became fractured in the rim after it had been at work some time; they sent it to Sheffield to be electrically welded, and it continued to work until a new one was prepared and fixed.

The author said he thought it would be best to drive with dynamo and engine separate through a belt, instead of a direct coupled arrangement. He (Mr. Saxon) would like to know the reason. Mr. Heaton gave as an instance of cast iron being welded the case of teeth broken from large cast iron spur gearing. It appeared to him that the repair could have been quite as inexpensively effected by ordinary methods, such as engineers generally adopted, by putting in brass or wrought iron teeth. It was worthy of note that ironfounders every day carried out some very successful "welds" or "burns" in connection with castings. Some of the moulders were very clever in executing repairs in that way, and he was inclined to think that probably these were as successful in many instances as could be done by electric welding. He believed, however, as he had said before, that there was a distinct field for both the systems of electric welding, but he did not know whether it would pay an engineering works, unless it was one of considerable magnitude, to go to the expense of laying down plant for the purpose, in view of the fact that it was not very often such an operation was required, although it was required occasionally.

Mr. J. Beard remarked that apparently electric welding for steel had come to stay. With regard to welding iron, he might mention that when in Sheffield he was once engaged in making some wheels for large dredgers. These were cast in malleable iron, 5ft. 10in. diameter, 11½in. on the boss, and about 1ft. deep. After going through the annealing process, however, all the wheels went at the root of the arm where it joined the rim. A neighbouring firm had a special plant for electric welding, and had been very successful in making steel castings which were unsatisfactory into good ones by that process. This firm agreed to make the wheels right, but they only succeeded in making two out of the ten to stand, the others did not take the weld properly. He was not surprised at the welding of teeth in a cast iron pinion, but he should like them to weld a hole in the bore of a cylinder, because though they made it as hot as they liked there would be contraction to cope with when cooling, and it would fracture when cold.

Mr. R. M. Neilson said the author appeared to think that with the twin carbon system there was more risk of oxidation. As far as his own information went it was not oxidation that was to be feared so much as carbonisation in the weld, and consequently excessive hardness. To remedy this defect iron oxide or manganese oxide had been deposited in the carbon in the arc. They had thus carbon *plus* metallic oxide, and not only had a better conducting arc, but prevented the carbonising of the metal afterwards. He had not seen a weld effected by this process, but he believed very good results had been obtained. He should like any information as to the relative cost of the twin and single carbon systems. He thought they could be applied in similar cases, and that the voltage would be very much the same whether they used two carbons or one. The voltage required in the Thomson process was lower because they had in

it a complete metallic circuit, whereas in the other processes this was not the case. He might add that Galloway tubes were often welded, and if electricity would be useful at all in connection with welding for boilers it might come in there.

Mr. Jos. Butterworth said that to his mind the secret of electric welding, if they were to make it successful, was to get the two pieces of metal to a red heat right through, not simply an intense local heat which did not extend far from the point where the break in the metals occurred, as such a local heat meant the setting up afterwards of an immense contraction force which was bound to cause fracture. Until they got a homogeneous heat through the metal they would never get a successful electric weld.

The Chairman (Mr. Henry Webb) said he believed the late Sir B. A. Dobson was the first in this country to adopt the Thomson process of electric welding with any commercial success, and give them the benefit of his experience. Mention had been made of the welding operations at Johnstown. He had visited Johnstown and could support what was said about the welding there. In speaking of the longitudinal hammered weld, Mr Heaton said he used small pieces of steel scrap. It occurred to him that it might be better to use iron than steel, because it would contain practically no carbon, and would be fairly high in manganese, which was useful for welding. The table as to the analysis before and after welding was interesting, and he might call particular attention to the reduction in the amount of manganese after welding. With the consumption of manganese in the welding the material would lose a great deal of ductility, and consequently elongation. He would like to have some information as to the local strains set up by welding. Many of his friends had welded teeth in large rolling mill wheels, &c. He had however

known some of his friends in iron foundries who made large cylinders, 10, 12, 14, 15, or 20ft. diameter, try electric welding to get rid of pin-holes, but the result frequently was to make the holes larger and spoiled the cylinder altogether. He would like to know what was the best carbon to use in the Benardos process, and whether the number of ampères used had anything to do with the hardness or softness of the weld afterwards. Would the author in welding on a flat surface, say 6in. by 4in., begin the welding round the edge, or work "from centre to circumference," as it were. He might add that in welding a flat surface, cracks frequently appeared after cooling, and if they re-welded the cracks they appeared somewhere else, which pointed to local strains and stresses.

Mr. Reginald J. Wallis-Jones in a communication said: I have read, with very considerable interest, Mr. Heaton's paper on Electric Welding. The commercial developments of the arc-welding process, especially in the construction of barrels and cylinders made of thin sheeting, cannot fail to strike the attention of manufacturers. Mr. Heaton, in describing a barrel welded by the arc process, states that the body is composed of a thin sheet of No. 14 B.W.G., and mentions the impossibility of welding this by ordinary forge or gas methods. He further refers to an example of thin welding of two steel sheets of No. 22 B.G., and points out that this is probably the thinnest steel ever welded. Mr. Heaton, however, may not be aware of the enormous strides that have been made recently in electric welding by the Thomson process, with which process I am associated; and the following facts may therefore be of interest.

The welding of thin sheet metal by the Thomson process has been developed, and is at the present time being worked on a very large commercial scale in the United States. For instance,

in the manufacture of bicycle parts and fittings, the sheet steel of suitable quality is taken and stamped out to form head-lugs, crank hangers, pedal bands, &c., and the two edges of the thin sheeting are then electrically welded together by means of a special automatic Thomson electric welder. But by far the most interesting development in bicycle work has been the manufacture of the sheet steel tubing required for the framework of the machines. At the present moment bicycle tubing is being made commercially from homogeneous sheet steel, in thicknesses ranging from No. 22 to No. 10 B.W.G., the finished tubing being from $\frac{3}{8}$in. to $3\frac{1}{4}$in. outside diameter, and in lengths up to 15ft., with a continuous running longitudinal weld joining the two edges of the strip of sheet steel, which, prior to welding, is passed through a special bending machine, so as to bring the two edges opposite one another, and a running "butt" weld is made to form the longitudinal seam. These pipes will stand any test that is required in practice, the weight is much less than that of ordinary gas pipe, the finish is better, and for that reason it can be more readily gilded, nickel-plated, or given other finish, than ordinary steam pipe. I may mention that I have in my possession many samples of tubes which have been expanded after welding, and one which has been enlarged from $1\frac{1}{4}$in to $1\frac{15}{32}$in. outside diameter, without any sign of the longitudinal weld giving way. The tubes will also stand very severe bending tests.

It will be seen that by the Thomson process, the welding of extremely thin steel sheeting such as No. 22 B.W.G., is a thing that is being done every day without difficulty. In the same way as the tubing is made, steel cylinders are being constructed from sheets varying in thickness from $\frac{1}{16}$in. to $\frac{5}{16}$in., and in diameters from 10in. to 36in. This new departure in the Thomson butt welding process opens up a wide field. The tubing so electrically welded has many advantages over other

kinds. No acids are used in the process, and therefore the tubing does not readily rust. The diameters are uniform, the tubing being finished bright and smooth, as annealing and re-annealing are not necessary. It will also be well understood that the localisation of the heat is extreme, and is confined within well-defined limits. The metal is in no way disturbed, and the sections welded remain almost in the same condition as the original stock. Already drop forgings are being in many cases replaced by sheet stampings, the edges of which are electrically welded together. And again, in the construction of complex designs, it is found possible to simplify drop forgings by making them in two or more parts and subsequently welding the edges together.

The process has been applied to the following purposes outside the manufacture of bicycle parts and tubing, viz.: the welding together of automobile rims, tubes for artesian wells, automobile tubular boilers, steam clothes dryers, tubing for elevator frames, tubing for warehouse trucks, tubing for steam heating purposes in railway carriages, office buildings, &c. Sufficient has doubtless been said to indicate the immense possibilities opened up by the judicious application of electric welding.

Mr. Heaton, in his reply, said he was quite ready to believe that all the failures referred to in connection with boiler welding had occurred, but he was perfectly certain that the main reason had been want of skill in the welding, and, if he might be allowed to say so, in the designing of each particular weld. There was no weld that was universal. Each weld had to be taken according to the circumstances that applied to the particular position in which it had to be made. With regard to what was called "painting the surface," it was quite true that in the early days of welding, especially arc welding, practically nothing

else was done, but it was also true that if they went the right way about it with the electric arc they could get a solid weld right through.

The reservoir he had exhibited was a case in which painting the surface would have brought about failure, particularly in the corner weld. The end was made with a rather deep flange, and it was fitted tightly into the body when the body was welded up. The flange in the end was about 1¼ to 1½in. deep. The end of the body was brought up above the corner, and the weld was first made inside so as to thoroughly weld the flange to the body inside, and then the body was welded thoroughly above the flange, and over the top ot the corner of the flange. If the weld had not been good throughout it would not have stood the strain it was subjected to. There was another point about a weld like that, it would not have been satisfactory if it had been simply a fused weld. Fused welds were all right in their place, but they would not do in a great many places. In the case in question hammering was used as the welding proceeded, and this was very necessary to make the quality of the metal what it should be for resisting strains. Wherever it was possible to get a hammered weld he should recommend hammering.

He did not quite see there was anything particularly new about welding boilers. There were plenty of welds in boilers. He had a boiler at the works in which the Galloway tubes were welded. The flues were welded by gas, and the Galloway tubes on a coke fire. He was perfectly certain, although those welds were quite satisfactory, that the tubes could have been electrically welded more cheaply and with greater certainty than on a coke fire. Mr. Marsden spoke about the Thomson process being a great success. He was quite prepared to endorse the statement as far as his experience went. When, however, Mr. Marsden said arc welding was not a great success he could only say that if Mr. Marsden would come down south

some time he would be glad to show him that it was a success, and also why it was a success. One reason was that they never welded anything in which the weld was not carefully designed beforehand, and the welder trained to make that particular weld.

As to riveted joints for boilers he did not suppose that for some time anybody would try to replace them by welded joints. There were a great many things besides the excellence of the joint that had to be considered. There was a time however when riveted joints stood in pretty much the same position as welded joints, but great advances had been made since those days, and he did not see why there should not be an equally great advance in connection with electric welding as applied to boilers.

As to cutting tools, if in the course of using one a nib broke off, he should rather hesitate about trying to weld it on again, either electrically or by any other means, unless he were to put on sufficient metal to enable him to turn it true afterwards, because the heat applied in the electric arc or by any other method would be certain to draw the tool out of truth. Nevertheless a weld could be made, and it would be quite sound as a weld.

With regard to the effect on the eyes, spectacles were not good enough by themselves. They must have a series of glasses, and he had known many cases with a big arc where four glasses were used, in addition to spectacles. The fact that they often felt the effects of the arc on the eyes the day after was due to the severe strain on the muscles, caused by expansion and contraction.

It had not fallen within his experience to see the aluminium welds, but he had not the slightest doubt it could be welded if the heat could be applied so as to make it fuse and run together.

The weld in the barrel referred to certainly went right through the metal. The current passed from the metal to the carbon and the arc was struck in the metal, so that it was saturated, as it were, with the current and also with the heat.

The reason why the arc system required more voltage than the Thomson process had been already explained, namely, that there was not the resistance in the Thompson process that there was in the arc system. They had the two metals in contact in the Thomson process, and therefore the resistance was comparatively slight. In the arc system there was greater resistance and consequently greater voltage required to force the current through. He did not think it possible to make a satisfactory weld of any kind with the arc system if the amperage was less than about 50 and the voltage 65 to 70. He had not intended to make a strong point about the cast iron welding referred to, but simply wished to mention it as rather curious. In the case mentioned, putting teeth in a wheel, he should personally have more faith in a tooth thoroughly welded, or burnt in, than in one let or fitted in. The only advantage he knew of in using electricity for the purpose was that it could be taken to the wheel without shifting the wheel at all, and very little trouble was required to produce the heat necessary for doing the work.

Mr. Neilson's remarks about metallic carbon were interesting. He had heard of it before. There was, he understood, a patent taken out a few years ago in Russia for using metallic carbon. The late Mr. Dickinson, of the Bowling ironworks, tried the same thing. He failed, so far as he could gather, because the metallic carbon was not big enough, and he melted it up much too quickly.

As to the cost of twin carbon welding as compared with that of single carbon welding he had no definite information, but he did not see any particular reason why the cost should differ very greatly. He had never actually worked the twin carbon system

himself, although he had seen some good examples of welding done with it.

With regard to the use of scraps of steel in the longitudinal weld, perhaps the word "steel" was not correctly used, because as a matter of fact they used the scrap edges from the piece of metal they were welding, so that it was really iron, not steel. He had never seen any particular reason to expect very much local straining, although under certain conditions of welding there must be something of the kind. If he came across anything of that nature he would write to the Secretary and give what information he could.

In the welding of flat surfaces, as instanced by the Chairman, he would probably start in the middle and spread the heat as quickly as he could all over. He did not think the number of amperes affected the hardness or softness, providing the amperage was sufficient to make the weld perfectly. When a man began to learn welding he could not use a big current because it would be too quick for him and burn the metal, and might reduce it to a sort of clinker. He would therefore start with say 120 amperes, but at the end of six months he would probably be using a current of 250 amperes. When he found he could use a larger current without danger he preferred it because he was usually paid so much a foot or so, and by doing much more work the result as regards his wages was correspondingly satisfactory.

On the motion of the Chairman a hearty vote of thanks was accorded to Mr. Heaton for his interesting paper, and his careful reply to the discussion.

WORKSHOP ORGANIZATION.

READ SATURDAY, 7TH DECEMBER, 1901,

BY

Mr. A. P. LOSCHER,

(MANCHESTER).

In these days of keen competition the continuous perfection of labour saving tools and machinery has made such rapid progress as to completely change the whole methods of production, and revolutionise the organization of workshops.

Since most of the manufacturing engineers have realised the great importance of specializing their output and manufacture, the sound and up-to-date organisation in the workshop, proper classification and costing of production have been a necessary consequence.

Modern workshop organization and timely specialization of production, have borne such excellent fruits in America, and in later years in Germany, that it is almost surprising that similar conditions have not been adopted more universally throughout the works here.

The present development of trades' union principles—I mean especially those which are in actual practice in most factories—have no doubt shown themselves a very serious hindrance against modern organization, and almost threaten to be a national calamity to the industrial welfare of this country.

The most desirable objects by classification of works' orders are saving of time and avoidance of mistakes, and in my opinion the card system for entering and transferring works' orders seems to achieve those objects most favourably.

I have adopted a modified form of the library ticket, or card system, which is now in operation in a factory where both repetition and jobbing work of a great variety are produced, partly for stock and partly to customers' orders. The routine is as follows :—Orders received after being duly entered into the general order book, are immediately transferred into the works' suggestion book, which latter is entered up and supervised by the head storekeeper. The existence of a stores, or assembling department is, of course, unavoidably necessary in any kind of engineering works—whether work is executed for stock or not, also in a factory where works' orders are in a continuous variation in construction. Certain parts will even then have standard measurements, such as bolts, nuts, flanges, and other details, as well as raw material, which should always be at hand in its proper place.

To secure the proper up-keep of such stock, the storekeeper has a standard stock book. This is so arranged that each page contains on its head or top the exact illustration or sketch of a standard article, dimensions are represented on sketch by letters which are again printed underneath in alphabetical order, with the corresponding dimensions entered under each letter on the next line. This enables a great number of sizes to be entered on one half of the page, the other half of the page contains opposite the respective entries of the minimum and maximum quantities to be kept in stock.

In large works such a book requires continuous additions, which should be made and suggested by the different departmental foremen to the head storekeeper, who supplements and

places them for final decision before the works' manager. All stock settled in this way the storekeeper must be entirely responsible for, and have the power to renew his stock whenever necessary, either by demanding purchase or issuing orders by means of works' order cards (later on described) to the various manufacturing departments. This will avoid the usual official routine of clerical labour, which often results in unnecessary delay.

From both the works' suggestion book and standard stock book, all further instructions, with each order, are entered direct on to the works' order card. One card for each respective order. I have here four of those cards as specimens, each one of which is differently coloured, namely:—red, white, blue, and yellow, representing respectively, repair, manufacturing, establishment, and stock orders. The front of each contains the following information, printed:—Order number, date, drawing demanded, drawing completed, iron castings delivered, brass castings delivered, forgings demanded, forgings delivered, manufacturing departments number, date completed, destination, date when forwarded.

Spaces are left after all those items for entering up. Now follow several lines for description of order, with the printed remark underneath to return card immediately after completion of order to stores, from there to order clerk for delivery instructions, and finally to drawing office, where card will be filed away and kept for future reference. On the back of this card spaces are provided for the complete assembly of parts necessary to execute orders, also columns to indicate stock in hand, and piece-work prices for parts to be made. These parts are illustrated by Fig. 1.

FIG. 1. (FRONT.)

R.O.....

DRG. NOS.....

Date Ordered .....Date Finished .....Drawn by.....

Patterns Demd. .....Patterns Deld. .....Foreman .....

Iron Castings Deld. .....Foreman .....

Brass Castings Deld.....Foreman .....

Forgings Demd. ....Forgings Deld.....Foreman .....

Manufacturing Dept. No.....Wanted by .....

Date when Order Completed ....Foreman .....

Destination of Order ....

Date when forwarded .....Delivery Clerk....

Quantity.	Size.	Fig. No.	Description.

"This card must be returned along with completed order to stores," and from there transferred to Order Clerk at once for delivery instructions, when completed return at once to "Drawing Office."

FIG. 1. (BACK.)

Assembly of Parts required to complete order.

No.	PART.	In Stock	Weight. T.	c.	q.	lbs.	Mark No.	Metal.	Piece Work Rate

This original works' order card is signed by the respective foreman of each department through which it travels, therefore containing precise information as to the progress of order.

The storekeeper makes out the cards from the works' suggestion book in the first instance, entering order No. and description of job on same, and then forwards card at once to drawing office. As soon as drawing is made, or drawing already in existence got out, the draughtsman makes out an assembly sheet for same in drawing office. This sheet is so arranged, that iron castings, brass castings, wrought iron and steel parts, stock parts, purchased parts, bolts, studs, &c., have a separate heading, and spaces alloted, each of which is divided respectively with corresponding columns, containing divisions for description and quantity, also for rough and finished weights, dates when ordered out and delivered. Card, drawings, and assembly sheet are then returned to stores, where the respective columns for parts in stock are entered up on sheet and card by the storekeeper. He also copies from assembly sheet the particulars of job on back of works' order card. Drawing and card with the above information entered are then forwarded to pattern department. The assembly sheet remains in stores, and is entered up and dated according to progress of order.

To avoid delay with orders which require both iron and brass castings, repetition work and forgings, departments' cards are made out at the same time by the storekeeper, and issued direct to the various departments. For instance, while the original works' order card is forwarded by the pattern department with the corresponding patterns to the iron foundry, a department's card is issued at the same time to brass foundry, the same being the case with the various manufacturing departments whose duty it is to produce certain parts of order, so that by the time when the original works' order card reaches the manufacturing department, all the various parts not produced in

same, are either in hand or already delivered in stores. Departments' order cards are of the same size and colour respectively as the original works' order card, but containing on the front side column spaces for order number, and when wanted by, date of delivery, description of operation, and printed remark that the card must be returned with completed job to stores. The back of card contains assembly, number of, metal and piecework rate, illustrated by Fig. 2.

FIG. 2. (FRONT.)

M.O. .....

DEPARTMENT No. .....

Date Received ..... Drawing No. .....

Date Complete ..... Foreman ..... Wanted .....

Quantity	Size	Fig. No.	DESCRIPTION.	CASTINGS.	
				IRON	
				Ordered	
				Received	
				BRASS	
				Ordered	
				Received	

To easily recognise the various assembly sheets as to nature of orders, we enter those which contain brass parts only on green assembly sheets, while those consisting of brass, iron and steel, are made out on white ones. Each assembly sheet contains the following printed instructions for assembly clerk. Immediately on receipt of this assembly the castings and parts enumerated must be ordered from the various departments or entered on the shop requisition cards for purchase. The date of completion, and weights for all orders must be entered on the

FIG. 2. (BACK.)

ASSEMBLY OF CASTINGS.

No.	PART.	Piece Work Rate.	Mark No.	Metal.	Received in Stock.

sheet. On full completion of assembly, the parts must be delivered to the foreman, and this assembly signed and dated, and handed to cost office. Illustrated on Plate I.

Shop requisition cards, mentioned hereby, are at the disposal of every departmental foreman, also the storekeeper and his assembly clerks.

Requisitions of any kind, such as material, files, tools, and whatever has to be purchased are entered on same. Colours and shape are the same as works' order cards, front contains columns for order number, date, description of what is required, with the following printed note underneath:—"I have carefully examined stock, and find we have nothing similar in stock, signature Storekeeper, Manager." Back of card contains, date ordered, date promised, date delivered, illustrations as Fig. 4.

FIG. 4. (FRONT.)

R.O.....

Requisition for above order, made by No.....Department.

Please supply without delay, as follows.

I have examined the above requisition, but find nothing similar in stock.

.. ..Storekeeper.

.....Manager.

FIG. 4. (BACK.)

Date Ordered .....

Date of Delivery promised .....

Date Received .....

Remarks .....

The shape of all cards previously mentioned is such that the order number column is printed on a raised portion of card. Works' order cards are placed in boxes, which are divided in main partitions of four months each, each one of these monthly partitions is sub-divided again into six smaller ones, each one for principal line of production. These partitions are arranged in a slanting position, so as to show each card raised above the previous one. The name and description of each partition is shown on a small square cut out, the first one being in the left hand corner, while the remaining five follow in a diagonal line over each partition towards the right hand side. The four monthly partitions are indicated by squares in a similar manner, with name of month printed on red background, so as to easily distinguish same from those dividing the different manufacturing partitions, which have description printed on white background.

Works' order cards, kept and arranged in boxes in such a manner, enable the foreman to see at a glance the age and nature of all his respective orders. These boxes are fixed, preferably, in foreman's office.

In works where a variety of repetition work is produced, each departmental foreman should have an assembly clerk for his assistance. The desk of such a clerk, however, should be in the stores, and not in the foreman's office, as rough and partly finished material concentrates within such stores, every information wanted is always ready at hand for the assembly clerk, and it is his duty to collect and assemble all material, castings, &c., for a certain order in the stores, and then forward to his works department; also to place new works' order cards in the right partition of the foreman's order box. From this box the foreman takes and issues all instructions for his men to execute the various jobs. For each job a job card is made out by the foreman. The card is arranged and printed as illustrated in Fig. 5, which shows front and back of card.

FIG. 5. (FRONT.)

JOB CARD.

NAME OF FIRM.

Regd. No..... Name .....

Job No. ..... Reference Rate .....

Description .....

.....

.....

Weight Gross ....Weight Nett.....

Signature of Storekeeper ....

Commenced Date..... Hour .....Foreman.....

Finished ,, ... ,, ... ,, ...

Time in Hours.	1st Week.	2nd Week.	3rd Week.	4th Week.
Friday				
Saturday				
Monday				
Tuesday				
Wednesday ..				
Thursday				
Total				

PLEASE READ OTHER SIDE.

When giving out the job the foreman fills out spaces for workman's name, his check number, number of job, and description of operation of work to be done. Then, this card is sent at once to the stores, with an extra demand ticket, if necessary, to obtain the material wanted, the gross weight of which is entered on job card, and signed by storekeeper. The foreman now enters date and time of starting job on card and hands it to the workman. In this instance, the card illustrated is arranged with daily spacing for time from part of a day to four weeks.

FIG. 5. (BACK.)

Notice must be given to the Foreman about one hour before finishing a job, and on the completion of it, this card must be returned to the Foreman, and another one obtained before commencing the next job.

As the employee will be held responsible for quantity of material and castings, he is requested to see them properly counted and check them accordingly.

As soon as the job is finished the Foreman will inspect same and transfer to stores.

Signature Storekeeper .....

Date.....

Price if completed within .....Hours	£	s.	d.
Price if exceeding above time	£	s.	d.
This job is expected to be finished as standard quality, if not such right through the above prices will be reduced to.....	£	s.	d.

Foreman.....

All the writing or booking which the workman has to do with reference to this job consists simply of entering daily the number of hours which he has taken on the job. When the card is returned to the foreman, on completion, he can see at once what time the job has occupied, receiving thereby permanent information which relieves him somewhat, to continuously watch the progress of a job, which otherwise would be necessary. Daywork or piecework entered and signed at commencement and finish by the foreman on this card gives a very accurate control, and exact prime cost as to time and material for a job, or its different operations.

Fig. 6 shows the various other job cards as used for small jobs, so as to enable the foreman to book several jobs on one card.

FIG. 6. (FRONT.)

DRILLING. JOB CARD. MARKING-OUT.

NAME OF FIRM.

Regd. No.	Name
Job No.	Reference Rate
Description	
Commenced	Finished
Total time	Foreman
Job No.	Reference Rate
Description	
Commenced	Finished
Total time	Foreman
Job No.	Reference Rate
Description	
Commenced	Finished
Total time	Foreman
Job No.	Reference Rate
Description	
Commenced	Finished
Total time	Foreman
Job No.	Reference Rate
Description	
Commenced	Finished
Total time	Foreman

☞ PLEASE READ OTHER SIDE.

FIG. 6. (BACK.)

Notice must be given to the Foreman in sufficient time before finishing a job, and on the completion of it, this card must be returned to the Foreman, and signed by him before commencing the next job.

No time must be checked at all by the Employee, as the Foreman alone is authorised to do so.

Fig. 7 shows a card on which a record is kept of the output from several automatic machines under the control of one man. You will notice that the time of each machine is kept separately from the total time of the workmen, and therefore a clear distinction of the production of each machine and its prime cost of output is shown.

FIG. 7. (FRONT.)

JOB CARD.

Work executed on several Automatic Machines under control of one man.

NAME OF FIRM.

Regd. No.	Name
Job No.	Reference Rate
Description	
Starting of Machine No.	Foreman
Stopping do.	Do.
Job No.	Reference Rate
Description	
Starting of Machine No.	Foreman
Stopping do.	Do.
Job No.	Reference Rate
Description	
Starting of Machine No.	Foreman
Stopping do	Do.
Job No.	Reference Rate
Description	
Starting of Machine No.	Foreman
Stopping do.	Do.

	F.	S.	M.	T.	Th.	Total.
Employee's Total Time						

☞ PLEASE READ OTHER SIDE.

FIG 7, (BACK.)

Notice must be given to the Foreman in sufficient time before finishing a job, and on the completion of it, this card must be returned to the Foreman, *and signed by him before commencing the next job.*

No time must be checked at all by the Employee, as the Foreman alone is authorised to do so.

FIG. 8. (FRONT.)

DAY WORK CHECK NOTE.

ORDER No.....

Workman's Name.....His No.....

Description .....

Gross Weight.....Nett Weight.....

Commenced	Date..... Hours.....											
Finished	,, ... ,, ...											
Rate per Hour ..												
Time in Hours ..												
Friday												
Saturday												
Monday												
Tuesday												
Wednesday												
Thursday..												

Total Time .....

Total Wages Paid . .. . £ s. d.

These cards are collected every day in each department, and forwarded to cost office. This is done most conveniently shortly before closing time, and returned early the following morning.

The cost clerk now enters the time shown on those cards on to the works' check note, which is also a card, and arranged as follows:—Fig. 8 shows front and back of card. These cards are placed in suitable shelving which contains one division for each workman, marked by his respective number, another row of shelving arranged in a similar manner is also fixed in cost office for the purpose of storing the finished and signed off workmen's job cards.

FIG. 8. (BACK.)

PIECE WORK CHECK NOTE.

ORDER No.....

Workman's Name.....His No.....

Description .....

Gross Weight.. .....Nett Weight..... ....

1st Reference Rate £ s. d. Hours Allowed.....

2nd " " £ s. d. " " .....

3rd " " £ s. d. " " .....

Day Work Rate per Hour .....

Commenced .. .. Date..... Hours.... .....

Finished .. .. .. " ..... " .....

Time in Hours ..												
Friday												
Saturday												
Monday												
Tuesday												
Wednesday												
Thursday..												

Total Hours.....Equal to £ s. d.

Balance £ s. d.

The cost clerk keeps a book containing all successive numbers of works' orders. Opposite each order number he enters the different numbers of workmen engaged in this works' order. He goes through them every day when the job cards come in from the works for the purpose of adding any further workman's number who may be engaged on the works' order. As each workman's check notes are kept in a division marked with his number, it is a very easy matter for the cost clerk to refer at any time with the assistance of his order number book which gives him every man's number engaged on the job, to the exact progress, or total prime cost of a job. The permanent record for the total prime cost of a job is kept on the prime cost note, also a card is printed in the four different colours as the works' order cards. Fig. 9 shows arrangement of

FIG. 9. (FRONT.)

M.O.....

Description.....

.....

.....

PRIME COST NOTE.

ASSEMBLY OF MATERIAL USED.

No.	Name of Part.	Tons.	Cwt.	Qrs.	Lbs.	£	s.	d.

FIG. 9. (BACK.)

M.O. .....

TIME TAKEN ON ABOVE ORDER.

Workman's Name.	His No.	Name of Operation.	Day Work.				Piece Work.			
			Hours	£	s.	d.	Hours	£	s.	d.
		TOTALS								

front and back of same. All information given on the various work check notes and assembly sheets is entered on this card, the front side containing all the materials used, while on the back every workman's number, and his respective piece or daywork is entered. These cards can be kept for permanent reference in successive order, according to order number, in a box of corresponding depth and width, and long enough to contain, say 2,000 cards. Each card is perforated with a hole for the purpose of passing a steel rod through same, which screws with one end in back of box, while the other end has an eye which is secured by means of a lock.

The workman's job cards previously mentioned show three different reference rates for each job, representing the principal

of the differential rate system. Although much has been written during the last two years in nearly all leading engineering journals about the eminent advantages which the intensified or differential rates system has shown over ordinary methods of piecework, also premium systems or gain sharing, I have not heard of any factory here adopting same. Fixing of rates by scientific methods, and the fixing of maximum outputs for men and machines are the foundation for economical and successful production.

Ordinary piecework, whilst superior to the daywork plan, and having been successful in its way, cannot claim any progress which has led to the achievement of the two objects just mentioned.

How much a workman can do in a certain time, and what he actually produces represent two very different figures in more than one instance. This, however, is due nearly always owing to want of proper recognition and award for the workman's capacity, as a man and individual. We mostly recognise him by the position he holds, and regulate the scale of wages accordingly, thereby offering him every opportunity to accept the errors and principles of trades unionism, which places the highly skilled man on the same level of pay as those of less intelligence and ability, but holding the same position.

To illustrate the great influence which a guarantee of higher pay for a maximum output has upon the workman, I will refer to a case with one of our own men some months back. To turn a certain number of articles this man received 1s. each under the old piecework system, and although handling the same work periodically for the last two years, he never made them pay. After introducing the differential rate system, which came in operation on the 1st January this year, a careful investigation was made with this particular piece of work, and we found it could be made in 50 minutes. This we demonstrated to the

man on his machine with his own tools, and then fixed his price for 24 pieces at 10d. each, providing that he finished them within 20 hours. This he now succeeded in doing, and has done it ever since. The man's day work rate as a capstan hand was 7d. per hour, and the encouragement offered with the above rate was therefore considerable. The institution of this new system, although properly explained to all the men by means of circulars, was not received very friendly, and a good deal of opposition was shown at first. However, proper and careful revision of prices when fixing same, by means of feeds and speeds corresponding with the capacity of a machine, the testing of resistance, and quality of the most suitable cutting tools, making due allowance for times of fixing jobs, &c., and the first balance bills of those who were successful with the first rate, soon restored confidence with many of those who were holding reverse opinions.

The differential rate system also offers better terms to the willing and industrious workmen than any trades union is trying to secure for any of its members. On our present scale the differential rate system enables every skilled man to earn as much as £3 per week of 52 hours, while every machine man and apprentice is allowed 50% above his daywork rate. Full credit is also given for the benefits arising out of an improvement made by the man on his own behalf to increase the output, and so giving full scope for his ambition.

When a member of the trades union he will be restricted from earning more than 25% above the recognised rate of district wages, and every possibility of social betterment for the intelligent workman is thereby strangled, and no opportunity given to improve his mechanical skill and knowledge. How very severe the consequence of such principles have told upon the productive capacity of this country—the British manufacturer, who experiences daily the keen competition of other

nations in the world's markets, can furnish the best proof as to the seriousness of the situation.

Absolute want of even elementary education by the largest number of working men makes it very often an extremely difficult matter to introduce any new system of organization, pay, or machinery.

The excellent facilities, however, which are given at the present time by the numerous technical evening schools should therefore be taken full advantage of by the employer who wishes to improve the situation in future. A beginning should be made by compelling every apprentice to regular attendance. The fees in such cases are so low that it would more than repay the employer to cover same.

Taking boys and youths of a large town as they are, and not as they ought to be, when entering a factory for the purpose of learning a trade, I have found that by compelling them to attend these technical classes, and further, giving them every encouragement possible under the circumstances, are the only means of gaining successful results. For instance, a record book given to each apprentice and signed once every week on the spaces provided therein by his departmental foreman, as to his conduct, industry, general behaviour, and daily time-keeping, with an extra weekly bonus in lieu of satisfactory remarks entered in same, has proved very beneficial. To secure permanent attention and care being bestowed upon such a book all the weekly bonuses should be retained by the firm until the conclusion of his apprenticeship, and the book sent home for weekly inspection to the lad's parents. Once every month the manager should enter or stamp the amount of bonus upon the spaces signed weekly by the departmental foreman, and also pass final judgment in doubtful cases.

Another difficulty I have come across is the constant objection of apprentices to perform certain operations on machines, or to

do any one class of work during a certain time, as they seem to think no experience would be gained thereby. I may say that a great deal of such opinions are inspired to the youthful by men who fancy their interests, as a productive class, may be endangered by such lads performing certain operations with the assistance of machine tools, but gross exaggeration only could justify such views, and give cause for complaint. It is, on the contrary, every day's experience that a turner who has a knowledge of and can manipulate himself a modern capstan lathe, besides his own machine, is a far superior man and produces better class of work in a shorter space of time than the old hand, who only knows the movements and tools of his own screw cutting lathe, Taking also the present improvements in modern construction of lathes, the use of limit gauges, cutting tools, &c. into consideration, a man can certainly not qualify as a first-class turner on a well constructed lathe without an intimate knowledge and experience of operations and capacity of capstans, their tools, and appliances.

In a properly organized factory boys should be given to understand that it is necessary for them to begin elementary turning on a simple capstan, and afterwards, if possible, on a combination lathe and capstan, and then the screw cutting lathe for completing apprenticeship to general turning. It will be in his interest to eagerly grasp every opportunity to turn brass, iron, and steel, if he wishes to qualify as a modern and up-to-date turner. The boy, whose commencement of elementary turning consisted of turning say, a plain stud, on an ordinary lathe would hardly produce equal results in finish and time with a boy who has been taught to do such simple work on a capstan in the first instance, and then given the apportunity to turn an odd stud on an ordinary lathe.

Similar conditions apply equally well to an apprentice to fitting. One who has been taught to lend a hand, during his

term, to the milling, planing, drilling machine, or shaper, and has been acquainted with pneumatic tools and grinding machines, will certainly handle his file with better advantage, knowing when to avoid unnecessary work, and treat the various machine parts, which come to him finally, with greater care and skill than the man who made himself conversant only with vice, bench, file and chisel.

Compelling apprentices to work on strictly modern lines of production will greatly assist in successful organization, and weaken resistance, gradually and surely, of those journeymen still under the influence of trades union principles.

When aiming at economical and accurate production, great care and attention must be paid to the tool room, which should be the best organized, and up-to-date department within the works. Every detail should have its proper place, and every drill, rymer, tap, die, &c., constantly kept sharp, and in the best of condition, ready for use. It is certainly the best plan to allow no grindstones whatever in the various departments for the men's own use. All tools should be ground by one or several men, especially appointed. This will not only save time, but ensure correct sharpening of tools, by the use of clearance gauges, and provide the men who should keep duplicate sets with a constant supply of first class tools, thus saving their own time being lost on such operations. All special tools, drills, jigs, gauges, forming tools, box tools, templates, &c., should be demanded from and returned to tool room. They should be given out in return for checks only, and the latter placed on the shelf or in the partition from which the tool is taken, while a ticket containing the description of tool should be placed upon the respective number of man on check board. This board contains all the numbers of employees, and is of course kept in tool room. When the tool is brought back, the check is returned to workman, tool replaced, and ticket upon check board destroyed.

I have found five metal checks for each workman stamped with his respective number amply sufficient. Drawings are given out, and returned in a similar manner from the drawing office. Each man, therefore, is supplied with two sets of checks, which are of two different diameters, to make the distinction between drawing and tool checks. All work turned out in tool room should be of very best workmanship, and serve as example to the other works' departments. It is an established experience that a highly finished jig, gauge, or forming tool will be handled with more care, and help to turn out better work, and last longer than one finished after the general style of what is termed "our own use."

Just the same as some intricate and expensive machine needs the best of oil, and regular attention, so requires the first class working man the best of tools and conveniences. A well lighted and ventilated workshop, with every necessary sanitation to ensure the utmost cleanliness, has never failed to favourably influence the working man and his production. This is best illustrated in our modern exhibitions where all sorts of high class machinery and products are shown. Nine cases out of ten prove the fact that the best machines, the most reasonable in price, have been made by men who are employed in workshops where modern organization has done everything for their health and comfortable surroundings. The proprietors of those up-to-date concerns are generally not in the habit of boasting as philanthropists, but have strictly acted on business lines, knowing that to build up a modern and profitable manufacturing concern, it is absolutely necessary to consider the welfare and convenience of the workmen accordingly.

Such modern and successful organization have not only shown an increased output and accurate production, but have also obtained better relations between employer and employee, which have led to mutual satisfaction and content—an achievement

sufficiently important to be the highest ambition for every progressive engineer or manager.

While improving his education, the working man will also show more aptitude for modern production, and appreciate the value of clean and sanitary arrangements, and preferably seek employment in workshops where such conveniences can be found.

Mutual benefit can only follow by offering full scope for the workman's experience, knowledge and ambition. Every means and opportunity should be open to him for stating any suggestion he may have for improving upon the design or production of the various articles handled in the works. I think that suggestion boxes, as found in several up-to-date concerns, answer the purpose very well. Such a box secures secrecy and seclusion, and wins the confidence of a man who would otherwise shrink from making his suggestion public. Opened once every month by the manager personally, and prizes distributed for the best suggestions, will stimulate the necessary encouragement. It is further of great importance for the success of an establishment to maintain the most reliable, truthful, and strict business-like relations between the foremen of the various manufacturing departments. While receiving the individual reports of the different departmental foremen as to particulars and progress of work in hand, the works' manager should also confer with all his foremen, chief draughtsman, and head storekeeper, at a periodical conference, either weekly or monthly, according to the nature of the business. During such meetings the works' manager should preside, and all matters relating to important work in hand, its state, progress, promises as to delivery, and remarks in reference to quality of work done at the various departments should be fully gone into. A report about a bad casting, for instance, made during the presence of the foundry foreman, will receive better consideration, and be dealt with more justly and carefully than if mentioned through the ordinary individual report from the

department to the manager. Such conferences also serve for ventilating any complaints, to receive suggestions for improvements relating to output and quality. Some independent person should be present at all meetings to take shorthand notes of everything discussed and mentioned. The secretary of a limited company would be suitable for such a position. He should prepare copies of the meeting's proceedings, and hand one to the managing director and the other to the works' manager. Such a report would be a guide for the next conference, and also retain permanently all suggestions for improvement offered, and assure due credit to the right man.

Nothing will more endanger successful production than jealousy or friction between various authorities responsible for the output of a concern. Whenever any signs of such undesirable relations appear, the manager should sternly insist upon having all differences settled at a joint conference, and absolutely refuse to offer any other opportunity. Adopting the conference and recognising same as an established institution, justice and fair play, along with the feeling of participating as a member of a firm, will result therefrom, and assure an independent voice to everyone concerned. Under these circumstances the head of a firm could safely trust complete authority and power to his manager, and avoid unpleasantness usually caused through the habit of some employers by accepting too many reports and opinions, which only add difficulties towards the proper control of a shop.

Broad principles and modern conveniences for the employees should be accompanied with strict business-like supervision of labour, and its proper protection. Such rules should not only be adhered to inside the shop, but also outside its direct sphere of influence. It is well for the general prosperity of an engineering district to strictly stand by and enforce every point decided upon between employers for their mutual interest.

I consider this question of extreme importance towards a more general adoption of modern organization, and successful regulation of labour and production, and hope that a very spirited discussion will follow in connection herewith, thereby achieving the object which I had in view when preparing this paper.

DISCUSSION.

Mr. Thomas Ashbury expressed the opinion that the members had had a most interesting and practical paper, in which almost everyone present would have a direct personal interest, and he hoped that a good discussion would ensue.

Mr. Alfred Saxon thought the author should be congratulated on the paper presented, and if it had one fault, it was that it contained too much matter, the number of points raised being in themselves sufficient to base a separate discussion thereon. The paper, speaking generally, seemed to be a satisfactory attempt to solve the problem of works organisation in establishments where the various manufacturing parts were of such a size as to be finally transferred to the stores. In September last he had an opportunity of visiting the International Engineering Congress held in Glasgow, when papers were read on the subject under consideration, especially the premium system of remunerating labour in the workshops and workshop organisation. Subsequently he was favoured with permission to go through the particular works where these systems were in vogue, and it appeared to him that although great advantages had been derived from the premium system of remuneration, yet he found on enquiry that the firm had had to put down a good many tools to achieve the benefits obtained.

The system of the author, he was under the impression, would be too difficult to work in a general engineering workshop such as his own, where so many of the parts were heavy, but at the same time he would try to make some effort in the direction suggested. Whilst appreciating the author's remarks, he had no hesitation in saying that he was utterly wrong in stating that no firms were at present working on similar systems to that indicated, because in his, the speaker's knowledge, there were several in Manchester, and further he was of opinion that the author in stating that the majority of firms had no means of ascertaining their costs was guilty of considerable exaggeration.

Mr. Arthur Hobbs observed, in replying to Mr. Saxon, that he could readily show where the author's system was working in a general engineering works, thus proving its applicability to that class of works. The author's system, however, seemed to utterly ignore the importance of the drawing office, which as every engineer knew, was one of the most vital factors at the present time in a large engineering works.

Mr. Frank Prout asked whether the card system would be applicable in break-down shops where that was a speciality. As regards costs he might say that in the firm with which he was connected the cost of any particular job could be got up to the preceding evening.

Mr. W. H. Cook asked what was the probable cost of establishing the system, say in a works of 1,000 men, and further what was the cost of up-keep.

Mr. Walter Yates observed that one of the points in the author's system which struck him particularly was the great number of cards that had to be used, thus rendering the system

complicated. The subject before them was one in which he had been interested for some time, and they had in operation at their works a similar system with the restriction that each job had only one card. Mr. Yates described this system. The author did not appear to have mentioned the shop costs, which was an important factor, and he would like him to give them some idea on shop charges.

Mr. C. H. Collier had no hesitation in saying that the author in commenting upon the absence of general organisation in Manchester engineering workshops shewed that he was utterly unacquainted with the district, because, in his opinion, there would not be the slightest difficulty in taking the author to a number of engineering shops in this district where it would be difficult even for Mr. Loscher to suggest any improvement.

Mr. W. Ingham was of opinion that the system suggested by the author was altogether too elaborate and complicated, and in fact would necessitate a staff utterly out of proportion for the benefits realised.

Mr. James Bolas observed that the author in making the statements regarding the absence of system in English workshops had altogether exaggerated the position, as could be readily proved, and further, he could not bring himself to believe that the complicated system of cards elaborated by the author would prove of benefit in the expedition of work. It was so easy for men to say that they were waiting for cards, there being always a disposition for one department to say they were waiting for another. Recently, he was struck by a circular received from a German firm, which had been issued to their employees from which it appeared that the number of workmen was put down as 3,000, and the supervisors 800.

Under those circumstances, with such an amount of red tape and routine, he could readily imagine the financial disasters occuring in that country.

Mr. E. G. CONSTANTINE remarked that they were very much indebted to the author for his paper, and he had listened to the various critcisms with considerable interest. In regard to that of Mr. Yates upon the disadvantage of the various cards, he thought that superficially speaking, the different colour of cards would assist the men in discriminating and taking out the various costs. The author's system evidently, was working satisfactorily at the works with which he was connected, and although it might not be equally adaptable to other works, yet it possessed the basis of being modified in accordance with the particular requirements of each workshop. At the same time he agreed with the previous speakers, that when the author had visited more Lancashire engineering workshops, he would form a much better idea as to their efficiency and completeness in workshop organisation, and in their complete methods of shop costings.

Mr. A. P. LOSCHER replying to the interesting discussion to which he had the pleasure of listening, made a few general remarks before answering the various questions and comments made by the members.

He wished it to be understood that his paper and its contents were not in any way representing theory, but a system in actual working practice in every detail. Perhaps it might interest those who were doubtful as to its working successfully to know that he had invited everyone of their foremen, the various assembly clerks, the head storekeeper, as well as those responsible for the prime cost and piece work department, to be present at that meeting, and he had pleasure in noting that

every one of them had accepted the invitation. He felt sure that their criticism would prove of equal interest to them as it had been to him. The card system mentioned in his paper was not instituted straight away in their works in its present complete form, but on the contrary had been the result of careful trials and experience which made him gradually add one to the other as a matter of necessity until they covered every stage in the rotation of works orders.

Long before he instituted the card system, weekly order sheets were used to replace the foremen's order books, from the latter of which it was often difficult to find at once the particulars of some arrear orders. Weekly order sheets had the advantage of affording a better oversight of one week's orders, but at the same time there was no special distinction as to the nature of the various orders. This point was, however, of importance where a variety of orders had to be executed, and therefore he selected four colours, viz: white, red, blue and yellow, to represent manufacture, repair, establishment and stock orders respectively. It was of course natural that the most convenient form for such a distinction would be a card, one separate for each job, while at the same time a card gave the facilities as illustrated for entering fullest particulars of job on same, and also recording the time taken by various departments to execute an order. Similar circumstances led him to replace the workman's time sheets, whether daily or weekly, by job cards, one for each job. Actual practice soon convinced him that it was a quicker and better way to record the time taken on a check or record card instead of using books, where it was necessary to turn up so many pages for the purpose of further entry. This applies equally well to the final prime cost. One great difference from the card system in operation at their works and the well known library card system was, that only so many cards were required to be made out and attended to as there were jobs in hand. These

cards did not follow in a certain order fixed beforehand and consisting of say 5,000 cards as the library card system did, which meant that an almost equal amount of labour had to be devoted to them whether many or few orders were in hand. Their order cards were simply arranged in consecutive numbers which corresponded exactly with the number of orders coming in. Therefore if they had in one month, say 600 orders, 600 cards were made out; if in the following month the number of orders decreased, exactly the same was the case with the number of cards and the labour involved.

He wished to call attention specially to this matter, as he thought, judging from the discussion which had taken place, that many members were not quite clear on the subject.

In reply to Mr. Saxon's remarks he was fully confident this system would work equally well in a factory where large articles were produced. The successful working was easily ensured by adding proper organised stores and convenient transport arrangements to suit the works. One could find them already in operation in many modern shops. The previous remark of having added too many important points in the paper was, he ventured to say, not quite just and correct considering that the subject referred to dealt with workshop organisation in general.

The further comment of Mr. Hobbs that the importance of the drawing office had been under-estimated was not quite clear to him. Every one of their cards went first to the drawing office before anything could be done in connection with the order. The drawing office for this reason alone, remained the premier department in a workshop and was therefore not likely to be neglected in any way. Perhaps he forgot to mention that consultations between the manager and the foremen of the various departments and those responsible in the drawing office took place whenever necessity arose, either about design or manufacture of goods in hand; such exchanges of opinion did, of course, in

the majority of cases prove very beneficial. In breakdown shops where cost had to be got out immediately the adoption of job and cost cards should be of special value. A complete record of material used, labour expended, &c., could thus be obtained in concentrated form ready at any time for future reference and certainly occupying less time than the usual routine of bookkeeping.

The total number of cards used was eight and they cover everything from start to finish of an order, including instruction to foreman, permanent record of time, material and complete prime cost. If Mr. Yates would compare the number of books used and kept, to obtain the same result in the general run of engineering work, he thought he would be compelled to admit that his eight cards compare very favourably. Mr. Yates' further reference to one card, one job, was of course exactly what had been described in the paper. Establishment charges which he presumed Mr. Yates means by shop cost, were kept entirely separate and were standing charges added on every occasion to each job or its prime cost. As the latter will be different in nearly every factory depending greatly on the kind and quality of machines, tools and plant, he thought it not necessary to enlarge his paper in this matter.

Mr. Ingham's doubtful comments will probably change to the contrary if he will use the opportunity and ask the opinion of any of those gentlemen who are working this system in his works and were present.

As to the views of the remaining friends and members who had kindly taken part in the discussion, he was exceedingly glad to note that he had made an error in illustrating organisation in workshop methods of Lancashire, the world's great workshop, somewhat too pessimistic.

He was truly delighted to receive this information from members in whom he placed implicit trust and confidence.

Should he have wounded the feelings of any member in this direction, he wished to tender his apologies, but could not avoid pointing out that he had simply and truthfully stated his own experience regarding those factories with which he had been connected personally.

He thanked them most cordially for the warm interest taken in this discussion.

A cordial vote of thanks was passed to the author for his interesting paper and the proceedings terminated.

---

1 Plate follows illustrating this Paper.

wc

WORKSHOP ORGANIZATION.

ASSEMBLY FOR.....

STOCK PARTS.

No. off	Fig. or Mark No.	DESCRIPTION

No. off	1

No. off	

Order

WROUGHT IRON AND STEEL.

Deliv

No. off	Mark No.	DESCRIPTION	Rough Weig	

Assembly Completed, date.....

Signature of Clerk.....

UNIV. OF MICH.

46TH Annual Report

OF THE COUNCIL,

1901.

MANCHESTER:
HERALD & WALKER, POOL FOLD CHAMBERS, OFF CHAPEL WALKS.
1902.

COUNCIL.

1902.

President:

MR. E. G. CONSTANTINE.

Vice-President:

MR. HENRY HODGSON.

Treasurer:

MR. JAMES WALTHEW.

Trustees:

MR. T. ASHBURY — SIR W. H. BAILEY
" J. WEST — MR. HENRY WEBB
MR. J. NASMITH.

MR. D. ADAMSON, — MR. H. N. BICKERTON
" C. DAY — " G. DANIELS
" H. HALLIWELL — " G. SAXON

Librarian:

MR. R. GASS,
19, City Road, Higher Openshaw.

Secretary:

Mr. FRANK HAZELTON,
100, Ayres Road, Brooks' Bar, Manchester,

Annual Report of Council,

1901.

The Council have pleasure in presenting the 46th Annual Report of Proceedings.

To the membership roll during the year have been added—

	1 Honorary Life Member.
	30 Honorary Members.
	17 Ordinary Members.
Total	48

and after taking into account the loss by death, resignation, and erasure, the total number of names of all classes on the roll amounts to 501, as against 470 in the previous year, namely:—

	27 Honorary Life Members.
	197 Honorary Members.
	277 Ordinary Members.
Total	501

Upon reference to the Financial Statement, as certified by the auditors (see pages 288-9), it will be seen that the balance standing to the credit of the Association, after payment of all accounts due up to the 31st December, amounts to £5,102. 15s. 7d., as against £4,790. 12s. 8d., at the close of the preceding year, thus showing a surplus of £312. 2s. 11d. on the year's working.

Superannuation Fund.—At the commencement of the year there were six superannuants and subsequently another was added, making the present number seven, who are receiving a weekly allowance of 8/-

It is with regret the Council have to record that during the year death has removed the following members, brief memoirs of whom are appended on pages 285-7:—

Christie, R. C. - - -	Okehampton.
Hall, John - - -	Bury.
Potter, William - - -	Manchester.
Vickers, Michael - -	Do.
Widdowson, J. H. -	Do.

The following gentlemen have resigned their membership during the year:—

Forth, F. C. - - -	Manchester.
Parker. John - - -	Do.
Thomas, H. N. - - -	Huddersfield.
Wenk, W. C. - - -	Altrincham.

The following gentlemen have ceased to be members during the year:—

Banham, James - -	Sheffield.
Earnshaw, E. - - -	Heywood.
Gates, E. J. - - -	Manchester.
Lawrence, J. - - -	Do.
Lees, Samuel - - -	Oldham.
Lewis, L. H. - - -	Manchester.
Mills, William - - -	Do.
Place, John - - -	Do.

During the year, in addition to the ordinary meetings, the following Excursions and Social Gatherings have taken place, brief accounts of which are included herewith:—

April 25.—Visit to Preston: inspection of the Works of the Electric Railway and Tramway Carriage Company and the Electric Manufacturing Company. Attendance 120.

June 27.—Visit to Bedford: inspection of the Works of Messrs. W. H. Allen & Co., Limited. Attendance 50.

Oct. 12.—Inspection of the Works of Messrs. Ferranti Limited, Hollinwood. Inspection of the Manchester Corporation Electric Light Station, Manchester; subsequently assembling at the Grand Hotel. Attendance 200.

Papers Read and Discussions held during the Year.

Jan. 12.—"**Inaugural Address**" by the President, Mr. Henry Hodgson, "**Present Educational Systems.**"

Feb. 9.—"**School and Work.**" Discussion, introduced by the President.

"**Forced Lubrication.**" Do. do. Mr. C. Day.

,, 23.—"**The Laboratory as a help to the Practising Engineer,**" by J. T. Nicolson, D.Sc.

Mar. 9.—"**Electrical *v.* Rope Cranes.**" Discussion, introduced by Mr. Daniel Adamson.

,, 22.—"**The Testing of Lathes,**" by Mr. W. C. Wenk.

Oct. 12.—"**Engines for Driving Large Dynamos,**" by Mr. C. Day.

,, 26.—"**American *v.* English methods of conducting Engineering Establishments,**" by Mr. Ed. Wood.

Nov. 9.—"**Recent Developments in fine Machine Grinding,**" by Mr. H. Renold.

,, 23.—"**Electric Welding,**" by Mr. T. T. Heaton.

Dec. 7.—"**Workshop Management,**" by Mr. A. P. Loscher.

The Council, in conclusion, desire again to express their cordial thanks to those members and friends, who have read papers or contributed to the discussions during the year.

ANNIVERSARY DINNER.

In consequence of the death of Her Majesty, Queen Victoria, the usual Anniversary Dinner was cancelled.

OPENING MEETING OF DISCUSSION SESSION.

The Opening Meeting of the Forty-sixth Discussion Session was held on Saturday, October 12th.

In the afternoon a visit was paid to the works of Messrs. Ferranti Limited, Hollinwood, and to the Dickinson Street Electricity Station of the Manchester Corporation.

At Messrs. Ferranti's works the party, which numbered about 200, were received on behalf of the firm by Mr. A. E. Hadley, one of the directors, and Mr. C. Day, director and manager, and spent about two hours in visiting the various sections of the works, which are devoted to the manufacture of engines, machinery, and other apparatus connected with the generation and practical application of electricity for lighting and power purposes. The products of the firm are so well known as to need no description here, but it may be mentioned that the works give employment to upwards of 800 men, and are equipped with all the most up-to-date machinery and plant, whilst the organisation of the establishment throughout is of the most complete description. The first section visited was the meter department, where a number of special machines for the very small work involved in the manufacture of electricity meters were examined with interest. In the switch department the members had an opportunity of inspecting switches for high-tension alternating current, and also for continuous current, for both lighting and traction schemes. The heavy machine department was next visited, and here various heavy parts of engines and dynamos were seen on the machines. In the engine and dynamo erecting shop, large engines and dynamos in various stages of construction were examined, and the details fully explained, and in the engine-house a Ferranti engine at work was inspected. The winding shop, where winding for transformers and dynamos is carried

out, was next visited, and the pattern shop, tool stores, and the light machine shop were also inspected. In the last-named department, a considerable number of up-to-date English and American machines were to be seen.

At the Electricity Station the chief feature of interest was a Couple of 1,200 horse power engines, by Messrs. Ferranti, which are being used in connection with the Corporation tramways and lighting schemes.

From the Electricity Station the members proceeded to the Grand Hotel, where tea was served.

On the motion of the Chairman (Mr. Henry Webb), a vote of thanks was accorded to Messrs. Ferranti for their kindness in allowing the members to go through the works, this being coupled with the name of Mr. Day, and a vote of thanks to the Manchester Corporation, for throwing the Electricity Station open for inspection, was also passed.

Messrs. Day and Hadley responded on behalf of the firm.

Subsequently Mr. Day read a paper on "Engines for driving Large Dynamos."

LIBRARY.

The Association exchanges Transactions with the following:—

American Institute of Mining Engineers.
" Society of Mechanical Engineers.
Canadian Society of Civil Engineers.
Engine, Boiler, and Employers Liability Insurance Company.
Franklin Institute, America.
Gas Institute, Incorporated.
Institution of Civil Engineers of England.
" Engineers and Shipbuilders in Scotland
" Mechanical Engineers.
Iron and Steel Institute.
Liverpool Engineering Society.

Manchester Geological Society.
,, Literary and Philosophical Society.
Midland Institute of Mining, Civil and Mechanical Engineers.
Mining Association and Institute of Cornwall.
Mining Institute of Scotland.
North of England Institute of Mining and Mechanical Engineers.
North-East Coast of Engineers and Shipbuilders.
South Wales Institute of Engineers.
Society of Engineers.

The following Publications are received periodically:—

Cassier's Magazine.
Colliery Guardian.
Fielden's Magazine.
Engineer.
Engineering.
Iron and Steel Trades' Review.
Marine Engineer.
Mechanical World.
,, Engineer.
Practical Engineer.
Textile Mercury.
,, Recorder.
,, Manufacturer.

REPORTS OF EXCURSIONS.

VISIT TO PRESTON.

The members, on Thursday, April 25, visited the works of the Electric Railway and Tramway Carriage Company Limited, and the English Electric Manufacturing Company Limited, at Preston, both of which had been freely thrown open for the fullest possible inspection. As these works represent the most modern up-to-date methods for their special classes of manufacture, and have been laid out almost entirely on American lines, the visit was of exceptional interest to the members, as affording some basis of comparison with present English practice. The party, which numbered upwards of a hundred and twenty, was received at the respective works by the managers and officials, and was allowed, practically, a free run through the whole of the shops, with every opportunity of an unrestricted examination of any special plant or apparatus that might be of particular interest. Both works have already been fully described in the technical press, and it is not necessary to go into

details as to the general arrangement or the specialities of their plant, except to mention that, with one or two exceptions, the machinery and tools throughout have been supplied by American firms, and that, as far as possible, the work is carried out on American lines. Mr. Boyd, the manager of the English Electric Manufacturing Company, it may be said, prides himself upon the fact that he is a "Yankee of the purest type," and the foremen in most of the special departments have also been brought over from the United States. With the exception, however, of the leading officials, the workmen employed in each establishment have been drawn from the surrounding districts, and have had to operate American tools, largely on American lines of procedure. The Electric Railway and Carriage Works were the first on the programme for the visit, but the members divided themselves up between these works and those of the English Electric Manufacturing Company Limited, the latter, in fact, attracting the greatest attention. In the tramway carriage works the members had an opportunity of seeing the most advanced methods of manufacture in this special branch of industry so far as all the superstructural work is concerned, and the woodworking plant was of special interest, the machines being of the best types that have been produced in the United States for all the various processes connected with tramway carriage construction, and it was admitted by the officials that with English workmen and American tools they had been able to turn out cars quite equal in quality to anything produced in the United States, and, if anything, at even a lower cost. In the Electric Manufacturing Company's works, where, with the exception of the engines in the power house, which have been supplied by Messrs. Musgrave, of Bolton, and the Lancashire boilers for raising the steam, the whole of the plant, including even the overhead cranes, has been imported from the United States; here the visitors had an opportunity of seeing practically an American works put down in England, but, with the exception of a few foremen, carried on by British workmen. The general arrangement and methods of economical production were admitted to be in every way excellently designed. In the purely electrical department, the methods adopted were perhaps the best that could be seen even in America, especially in the apparatus for winding, and other important sections of this particular branch of work. In the mechanical department, however, the members were, perhaps, somewhat agreeably disappointed to find that American tools and plant were really in no way ahead of modern English equipments. It may be stated that the tools at the works have been obtained from the most eminent American

manufacturers, and arranged and designed for the special class of work they had to do, and in many cases the ingenious arrangememts for particular work attracted attention; but, apart from this, neither in purely automatic appliances, of which there were practically very few, nor generally in speed of running or quantity of work turned out, were they considered to be anything at all in advance of what is already being done in modernly-equipped English engineering establishments laid out for special work.

After a thorough inspection of both works the members adjourned to the Park Hotel, where they sat down to tea, and the president (Mr. Henry Hodgson), in proposing a vote of thanks to the two companies whose works had been visited, said he was sure the members would all most gratefully acknowledge the exceptional opportunities which had been afforded them that afternoon for so complete and thorough an inspection of these works. It was not every firm that would throw open their works so freely to visitors as had been the case on that occasion. The establishments they had seen were of the most modern type, and he was sure the visit must have been one of the very greatest possible interest to all.

Mr. Boyd, the Manager of the Electric Manufacturing Works, in responding, said that both the companies had been very proud to receive the members of the Manchester Association of Engineers as visitors to their works. All who had passed through them had been at perfect liberty to see what they liked, and ask what they liked, and get all the information they possibly could. He might add, with regard to their own works, that they were proud of the workmen who had been brought about them, and gathered from the district immediately surrounding, and although they were new works, that had not been running ten months, they were already getting better results than they were doing even in America. He could only add, in conclusion, that when they had to meet other manufacturers in the same line of business, they would give them a run for their money when it came to a question of competition.

VISIT TO THE QUEEN'S ENGINEERING WORKS, BEDFORD.

On Thursday, June 27th, a party numbering upwards of fifty, visited the works of Messrs. W. H. Allen & Company Limited, Bedford. These works, which are quite of modern type, and give employment to upwards of 900 workmen, were a few years back transferred from London, and laid out on the best up-to-date system, both as regards the arrangement of the workshops and the tool and plant equipment throughout.

The members were received at the works by Mr. W. H. Allen and his son, and conducted through the various departments, commencing with the general and staff offices, waiting rooms, cost deparment, and drawing offices. They then passed on to the boiler house, where there are three boilers of the Babcock and Wilcox type, each constructed for 300lb. working pressure, and evaporating 6,000lb. of steam per hour, all worked on the induced-draught system, with feed pumps by Messrs. Weir and Messrs. Worthington. The visitors were next shown a specially constructed condensing cooling pond—a very simple arrangement—to cool sufficient water for 500 horse power for use in the testing department. Passing through the pattern shop, there were to be seen a number of modern labour-saving tools, with the shafting electrically driven. In the brass foundry, which is capable of casting up to five tons, the plant included six-pot furnaces, air furnace, and magnetic separators, the machines being all electrically driven. In the iron foundry are three electric travellers, by Messrs. Craven, of Manchester, driven by their own motors, and portable heating stoves for drying. The smithy, which was a very well-arranged section, contained three steam hammers, and other requisite plant. The dynamo shop was next inspected, and here dynamos are made up to 150 horse power, chiefly for marine requirements. In the machine shop, a considerable quantity of automatic machinery was of interest, including special lathes by Messrs. Jones & Lamson, and the milling department was also well equipped. The tool room was a very interesting department, containing the newest American and German limit gauges and jigs under construction, and in the grinding, drilling, and turning departments were a number of special machines, by Messrs. Craven Bros., and Whitworth, of Manchester, and others. In the fitting shop, work in hand included a number of engines for the Admiralty, for main and auxiliary purposes, and electric energy, with other engines for various corporations, and condensing plants. The testing room, the last department visited, was fitted with appliances for testing engines up to 500 horse power, measuring, and other apparatus.

After the tour through the works, light refreshments were provided for the visitors, and the President (Mr. Henry Hodgson), in proposing a vote of thanks to Mr. W. H. Allen, said it had been quite a treat to go through the various shops and see the high quality of work they were turning out. They had been exceedingly well laid out, and splendidly equipped with tools of the most modern design; he did not think that either in America or Germany there were better works of their kind, and in England they certainly could not be better.

Mr. Henry Webb, in seconding the motion, also referred to the great pleasure it had given the members to inspect the works which had been so carefully designed and equipped by Mr. Allen, at Bedford. It had become rather a custom at the present time to depreciate anything English, and to magnify everything American. This was a tendency which he did not appreciate, and certainly did not agree with. It was quite possible some of the members in passing through the establishment might have found here and there points for criticism, but when Messrs. Allen had laid out their works, five years ago, they were certainly up to date, and they were still well abreast of modern improvements. A short time back the members had an opportunity of going through a typical American shop, which had been laid out in England, and comparing this with the works they had just gone through, he thought that if they were to pay another visit in ten years' time to see whose tools were in the best condition, it would be found that the great advantage would be with the tools at the Bedford works. England would never take a second place so long as they had enterprise such as that of which they had seen an illustration that day, in keeping abreast with modern progress and improvements.

The vote of thanks having been unanimously accorded.

Mr. Allen, in responding, said it had been a great gratification to receive the members of the association, and show them what they had been able to do in the way of the arrangement of the works and the equipment of the various shops. He might mention that in designing the works they had availed themselves, as far as possible, of such experience as could be gained by visiting similar works on the Continent and in the United States. With regard to the great progress in the United States, of which they heard so much, this, practically, had all come about within the last five or six years. What we were lacking in England was chiefly in method. When English firms had a better method in their shops, they would have nothing to fear, as the American workman could do no more work than an English workman and with fair play we in this country could more than hold our own. It was also essential that they should have a free interchange of knowledge and experience in connection with modern progress and improvements, and this in a large measure could be gained by visits to works such as had been made that day, in connection with which, whilst they had been glad to benefit by any criticism the visitors might have to offer, the firm, on their part, had been pleased to afford any information it was in their power to give.

OBITUARY.

RICHARD COPLEY CHRISTIE, M.A., was elected a Life Honorary Member in 1891, and was one of the Whitworth Trustees.

He died January 9, 1901, age 70.

JOHN HALL was the head of the firm of Messrs. Robert Hall & Sons, Ltd., power-loom makers and engineers, Bury. He was a native of Bury, having been born there on August 16th, 1839. He was the son of Alderman R. Hall, who was Mayor of the borough in 1881-2. The firm of which he was the head is one of the most important power-loom making firms in Lancashire. They were the makers of the largest loom in the world, which was recently put in at Messrs. T. Hardman & Sons, woollen manufacturers, Fernhill, Bury. He was one of the best known figures on the Manchester Royal Exchange, and was always a conspicuous figure at the half-yearly meetings of the Lancashire and Yorkshire Railway Co. It was mainly through his exertions, and the attention he has drawn to the subject at the meetings of the railway company, that large alterations and extensions have been made in connection with both the railway stations at Bury. In 1875 Mr. Hall was elected a member of the last Board of Improvement Commissioners of Bury, and he occupied a seat on the Town Council for the first six years of its existence. In 1894 he became Alderman, and during the same year was elected Mayor of the borough, this being the first occasion on which a father and a son had both occupied the mayoral chair in Bury. He was re-elected Mayor in 1895. When his term of office as an alderman expired, in 1897, he did not seek re-election. He was an ex-president and one of the founders of the Bury Chamber

of Commerce, honorary treasurer to the Bury Infirmary, and a member of the borough bench of magistrates.

He was elected an Honorary Member of the Association in 1892. He died September 14, 1901.

WILLIAM POTTER was elected a Life Honorary Member in 1885, and for a many years was connected with the works of Mr. Casartelli, Cheetham, where scientific and mathematical instruments were manufactured.

He died August 13, 1901.

MICHAEL VICKERS was elected an Ordinary Member in 1877. He was a foreman moulder and held many important appointments, and for a number of years was foreman moulder at Messrs. Galloways, Limited.

He died January 15, 1901, age 58 years.

JOHN HENRY WIDDOWSON was born at Manchester, September 22nd, 1828. He was bound apprentice to Mr. Bolton, Engineer, Castlefield, Manchester. After serving his apprenticeship he went as engineer to Messrs. Booth & Pike, where he introduced many improvements in their machinery; was afterwards with Messrs. Wm. Muir & Co., who so greatly valued his services that they promised him a position whenever he cared to return.

In 1851, he went to Whitworth's works, where his practical knowledge and ability soon brought him to the front; Mr. Whitworth being in some difficulty respecting a "Hoe" printing machine, supplied to the *Times* office, which could not be got to work satisfactorily, Mr. Widdowson was asked if he would try to remedy the difficulty. He undertook the work, and eventually was successful in printing the newspapers to the

entire satisfaction of Mr. Walter and Mr. Macdonald, the latter presenting him with a ring in recognition of his services.

On his return to Manchester he was made under-manager to Mr. Hulse, and after that gentleman retired from the firm he was made manager, which position he held for sixteen years. During his connection with Messrs. Sir J. Whitworth & Co. he designed and introduced many improvements in machine tools. He always insisted on good work, which contributed in no small measure to making the name of Whitworth tools famous throughout the world.

One of his many achievements while manager was to accept an order for 200 lathes to be completed (under a heavy penalty) in eight weeks, which he accomplished to the entire satisfaction of the client and his employer.

In 1876 he commenced business for himself as a manufacturer of screwing apparatus, and subsequently with the assistance of his four sons solely devoted himself to this particular branch, in which he effected many improvements.

He was elected an ordinary member of the Association in 1866. He died, May 12, 1901.

TREASURER'S GENERAL CASH ACCOUNT, for the year ending 31st December, 1901.

Dr. (Including Superannuation Fund Account.) **Cr.**

1901.			£ s. d.
Jan. 1. to Dec. 31.	To Balance as per last Report		4,790 12 8
	„ Contributions and Entrance Fees		718 16 6
	„ Interest from Mortgages on Properties	£180 0 7	
	„ „ „ Leeds Corporation 3½ % Stock	19 15 6	
	„ „ „ Bank	9 1 7	
			158 17 8
			£5,668 6 10

1901.			£ s. d.
Jan. 1. to Dec. 31.	By Rent—Grand Hotel		20 0 0
	„ Secretary's Salary	£65 0 0	
	„ Librarian's „	10 0 0	
			75 0 0
	„ Superannuation Allowance		135 4 0
	„ Funeral Allowance, Mr. Vickers		10 0 0
	„ Printing and Lithography of Transactions	£125 15 8	
	„ Binding of do.	20 19 3	
	„ Member's Lists	19 19 9	
	„ General Circulars and Miscellaneous Work	27 16 9	
	„ Stationery	4 8 2	
			198 19 7
	„ Library Insurance Premium		0 6 0
	„ New Volumes, Library		25 11 10
	„ Expenses *re* paper Electric Welding		4 14 0
	„ „ Opening Meeting Session		5 10 0
	„ Council, Sub-Committee, and Audit Expenses	18 6 9	
	„ Postages of Papers, Circulars and Correspondence	44 17 0	
	„ Sundries	20 2 11	
			88 6 8
	„ Delivery of Annual Volumes		6 19 2
	„ Cash invested in Properties: Mortgages	£3,550 0 0	
	„ „ „ Leeds Corporation 3½% Stock	600 0 0	
	„ „ „ Premium on do.	90 6 6	
			4,240 6 6
	„ Cash in Bank	£810 8 8	
	„ „ Treasurer's hands	40 1 11	
	„ „ Secretary's „	11 18 6	
			862 9 1
			£5,668 6 10

Audited and found correct,

E. G. CONSTANTINE
T. ROBERTS
W. INGHAM
} AUDITORS.

14th Sept., 1901.
8th Jan., 1902.

SUPERANNUATION FUND ACCOUNT, for year ending 31st December, 1901.

Dr. (Included in General Account.) **Cr.**

1901		£	s.	d.	£	s.	d.
Jan. 1.	To Capital invested as per Resolution passed at the Half-yearly Meeting, 14th June, 1879	2,100	0	0			
	,, Additional Capital voted at the Annual Meeting, 13th December, 1889	300	0	0			
	,, Additional Capital voted at the Annual Meeting, 12th December, 1891	600	0	0			
	,, Ditto, 11th December, 1897 ..	500	0	0			
					3,500	0	0
	,, Balance from last Report				3	17	5
Dec. 31.	,, Twelve Month's Interest on above Capital Invested as per Rule				128	6	9
	,, Amount from General Fund.....				2	19	10
					£3,635	4	0

1901.		£	s.	d.	£	s.	d.
Jan. 1. to Dec. 31	By Superannuation Allowances:— Mr. John R. Wolstenholme	20	16	0			
	,, William Holmes	20	16	0			
	,, John Dutton.....	20	16	0			
	,, James Schofield	20	16	0			
	,, J. G. Cochrane.....	20	16	0			
	,, J. Meller	20	16	0			
	,, J. Errock	10	8	0			
					135	4	0
	,, Balance to Credit of Superannuation Fund Account				3,500	0	0
					£3,635	4	0

Audited and found correct,

8th January, 1902.

E. G. CONSTANTINE,
T. ROBERTS,
W. INGHAM,
} AUDITORS.

R.